KOHLER CORALAIS BATH & SHOWER FITTING K-15131, K-15132, K-15133

ITEM	PART #	DESCRIPTION
1	40140391	Plug button
1-3	40140477	Handle kit
4	40140354	Cap - specify finish
5	40140353	Bonnet - specify finish
6	40140355	Sleeve - specify finish
7-9	40140122	Valve cartridge
8-11	40140392	Valve service kit
13-14	40140393	Screw kit (2 of each item)
25-29	40140394	Valve service kit (2 of each item)
27-29	09891678	Stop valve stem kit (2 of each item)
30	40140004	Cartridge (used on K-15132 only)

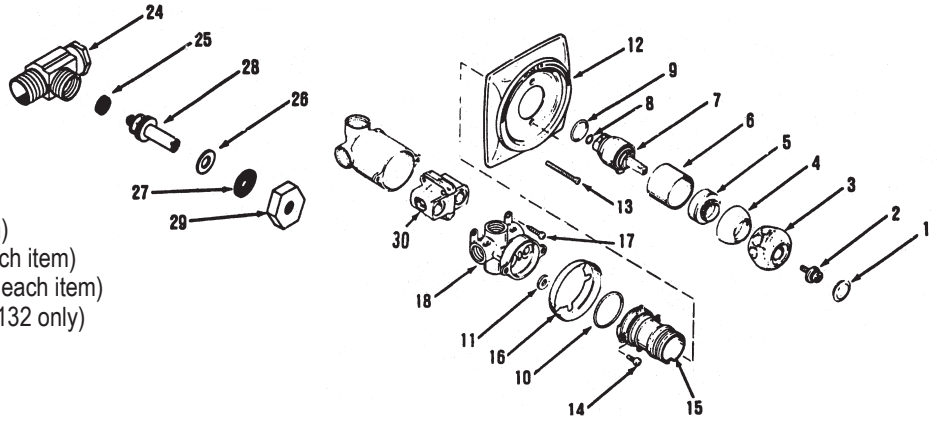

KOHLER CORALAIS BATH & SHOWER FITTING K-15231, K-15234

ITEM	PART #	DESCRIPTION
1	40140267	Sleeves CP (2)
2	40140268	Stem extensions w/o-rings (2)
3	40140464	Stem (closes counter clockwise) Hot & Cold
	40140269	Stem (closes clockwise) Hot
4	09896054	Unions (2)
6-9	09896050	Diverter service kit
6-15	40140270	Diverter assembly
17-20	40140395	Stop valve service kit (2 of each item)
27	40140271	Plug buttons (H,C,D)
31	40140396	Escutcheons (2 of item 31 & 32)
33	40140390	Escutcheons - valve w/ stops (2 of 32 & 33)
34	40140389	Escutcheon - Diverter (1 of item 32 & 34)

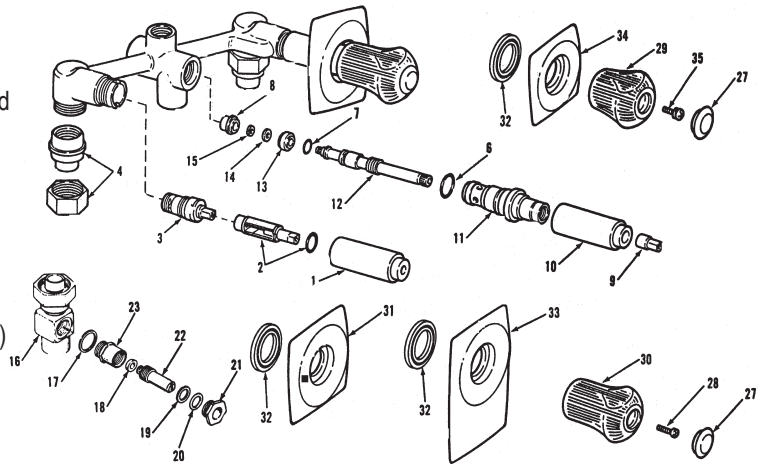

KOHLER BRAVURA & FLAIR II BATH & SHOWER FITTINGS

ITEM	PART #	DESCRIPTION
1	40140159	Spline adapters (2)
2	40140003	Cartridge
3-4	09891555	Unions (2)
22	09891434	Escutcheons (2)
23	40140272	Large Flair handles (pr)
	09891636	Index cap (H & C)

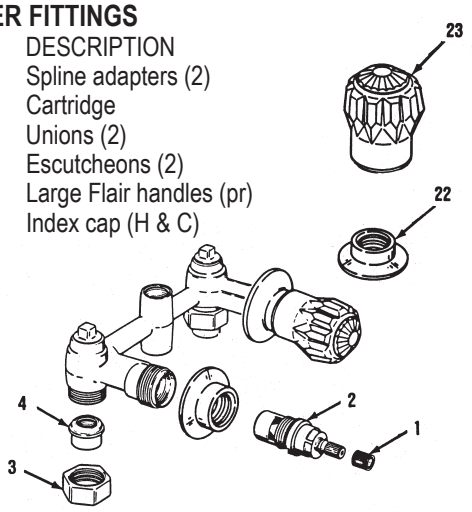

KOHLER DIVERTER REPAIR PARTS

ITEM	PART #	DESCRIPTION
1	40140273	Stem
3	40140274	Spring
4	40140275	Disc
5	09893000	Nut
6	40140276	Gasket
7	40950064	O-Ring
8	40140278	Plug
9	40140455	Stream breaker
10	40140456	Plug
	40140364	Repair kit (includes items 3-7)

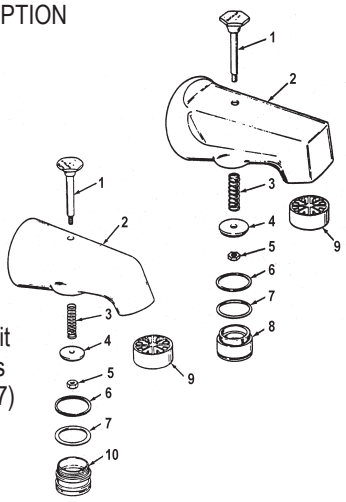

TOTAL MAINTENANCE SOLUTIONS
HOUSTON 800/392-5066
ORLANDO 800/327-3022
GREENVILLE 800/476-2212
LOOK FOR US ON THE WEB AT: www.TMSSouth.com

FAUCET REPAIR

KOHLER TRITON II & ALTERNA RITE-TEMP FITTING

ITEM	PART #	DESCRIPTION	ITEM	PART #	DESCRIPTION
1	09893930	Handle screw	18	40140291	Seat washer
2	40140280	Handle	19	40140292	Hot plunger
3	40140281	Sleeve	20	40140293	Plunger
4	40140282	Screw	21	40140004	Pressure regulator
5	40140283	Face plate	22		Body
6	40140359	Escutcheon	23	40140429	Index cap (4pk)
7	40140285	Stop nut	24	40700508	Screw
8	40140286	Screw	25	40140295	Handle
9	40140287	Screw	26	40140281	Sleeve
10	40140192	Cap	27	40140430	Face plate
11	40950082	O-Ring	28	40140431	Washer
12	40140360	Shield	29		Body
13	40950021	O-Ring	30	40140296	Stem
14	40140118	Spindle	31	40140297	Packing nut
15	40140428	Bar	32	40950048	O-Ring
16	NLA	Screw	33	09891782	Washer
13-16	40700118	Spindle S/A	34	09891450	Valve repair kit
17	40140290	Retainer plate			Items 11, 13, 18-20

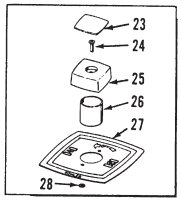

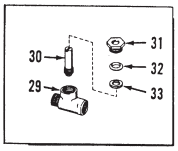

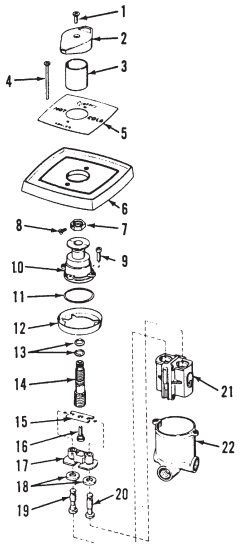

KOHLER CORALAIS BATH & SHOWER MIXING VALVE MODEL K-15101

ITEM	PART #	DESCRIPTION
1	40140391	Plug button
2		See item 7
1-4	40140109	Handle kit
5-7	40140478	Lever handle kit CP
7	09895050	Screw kit (1 item 2, 2 item 7&8, 4 item 11)
9	09894979	Dial plate
10	40140458	Stem adapter
12	40211333	Valve kit (1 of item 12&14, 2 of item 13)
	40140392	Valve service kit (2 of item 13, 1 of item 14)
15-18	40140457	Stop stem kit

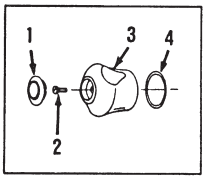

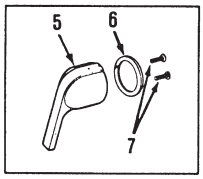

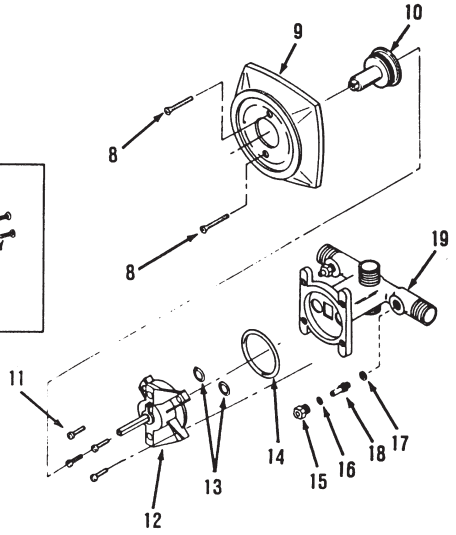

KOHLER CORALAIS PRESSURE BALANCED BATH & SHOWER VALVE K-15102

ITEM	PART #	DESCRIPTION
1	40140391	Plug button
1-4	40140109	Handle kit
4	09895050	Screw kit (1 item 4-6, 22 &23, 4 item 7)
8	09894979	Dial plate
9	40140458	Stem adapter
10	40211333	Valve kit (1 of item 10-13)
	40140392	Valve service kit (1 of item 11-16)
16-17	09891672	Adapter
18	40140004	Cartridge
20-23	40140478	Lever handle kit CP
25-29	40140394	Valve service kit (2 of each item)
27-29	09891678	Stop valve stem kit (2 of each item)

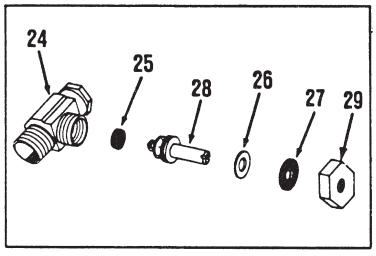

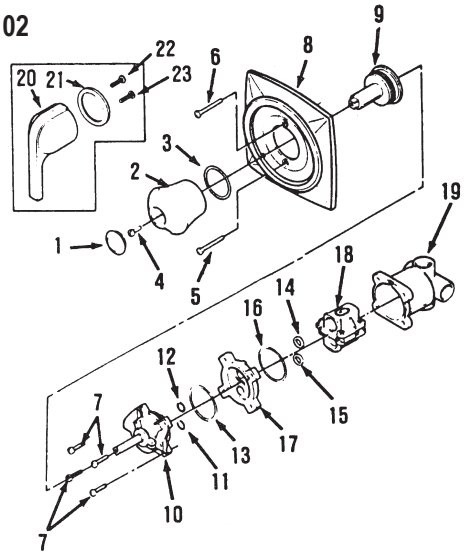

TOTAL MAINTENANCE SOLUTIONS

HOUSTON 800/392-5066
ORLANDO 800/327-3022
GREENVILLE 800/476-2212

LOOK FOR US ON THE WEB AT: www.TMSSouth.com

KOHLER ALTERNA, FLAIR & TRITON II BATH & SHOWER VALVES

ITEM	PART #	DESCRIPTION	ITEM	PART #	DESCRIPTION
1	09893930	Handle screw	15	40140408	Set screw
2	40140015	Cold handle w/ screw	16	40140407	Escutcheon
	40140014	Hot handle w/ screw	17	40140356	Set screw
	09963037	Diverter handle w/ screw	18	41001035	O-ring
			19	40140476	Stem
3	40140167	Escutcheon	20	09893049	Bonnet
4	40140009	Bonnet	21	40950028	O-ring
5	40950037	O-ring	22	40950017	O-ring
6	40950023	O-ring	23	40140154	Washer
7	40140031	Washer	24	40140274	Spring
8	40140150	Stem	25	40140154	Washer
9	40140105	Plunger	26	40140404	Plunger seat
10	40110118	Seat washer			
11	40140321	Screw	27	09890629	Screw
12	40150081	Sleeve	18-27	40140117	Diverter stem assy.
13	40140173	Renewable seat			
5-13	40140034	Stem assembly	28	40140342	Union
14	40140260	Knob	29	40140341	Union nut

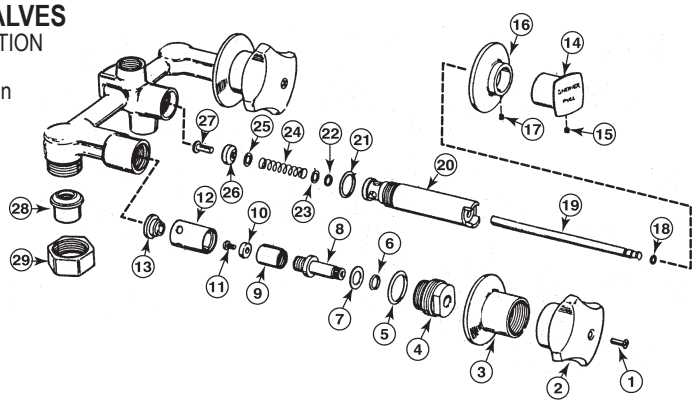

KOHLER TREND SHOWER & BATH FITTINGS (PRIOR TO 1980)

ITEM	PART #	DESCRIPTION	ITEM	PART #	DESCRIPTION
1	40140151	Index button – blue	14	50100033	Handle screw
	40140187	Index button – red	15	40140472	Pull knob
2	50100009	Handle screw – metal	16	40140399	Escutcheon
	09891486	Handle screw – acrylic	17	09890570	Set screw
3	40140263	Clear acrylic handle	18	40140471	Stem
4	40140176	Chrome handle	19	40140400	Sleeve
5	09890570	Set screw	20	40140402	Bonnet
6	40140399	Escutcheon	21	40950017	O-Ring
7	40140265	Bonnet w/ sleeve	22	40140154	Washer
	40140401	Bonnet w/ sleeve (lever handle)	23	40950028	O-Ring
			24	40140274	Spring
8	40140266	Washer	25	40140403	Retainer ring
9	40140135	Stem w/ washer & screw H&C	26	40140154	Washer
			27	40140404	Plunger seat
10	40110118	Washer	28	09890629	Screw
11	50100009	Screw	18-28	40140039	Diverter stem assy.
12	40950022	O-Ring	29	40140342	Union joint
7-12	40170003	Hot & cold stem assy.	30	40140341	Union nut
	40170136	Hot stem assy. (lever handle)	31	50100033	Handle screw
			32	40140473	Handle – pair
13	40140103	Seat			

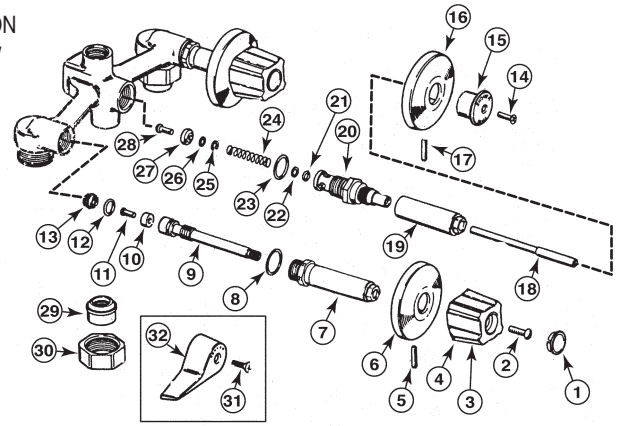

COMPLETE REBUILD KIT # 09801000
includes 4 (HCD), 6(3), 7-12(2), 18-28, 15

KOHLER TREND BATH & SHOWER FITTINGS (AFTER 1979)

ITEM	PART #	DESCRIPTION	ITEM	PART #	DESCRIPTION
1	40140151	Index button – blue	5-11	40520014	Stem assy.
	40140187	Index button – red	13		Body
	40140460	Diverter index	14	40140342	Union joint
	09893945	Red index – new style	15	40140341	Union nut
	09893950	Blue index – new style	16	40140460	Plug button
2	50100009	Handle screw – metal		09893955	Grey diverter index
	09891486	Handle screw – acrylic	19	40140120	Escutcheon
3	40140263	Clear acrylic handle	20	40140264	Sleeve
	40140176	Chrome handle	21	09890670	Bonnet
	40140125	“New Style” Trend	22	40950028	O-ring
4	40140120	Escutcheon	23	40950021	O-ring
5	40140264	Sleeve	24	40140432	Gasket
6	40140265	Bonnet	25	09890750	Stem w/ washer & screw
7	40140266	Washer			
8	40140135	Stem w/ washer & screw	26	09892050	Seat washer
			27	50100009	Screw
9	40110118	Washer	20-28	40140129	Diverter stem assy.
10	50100009	Screw	28	40140102	Renewable seat
11	40950022	O-ring	29		Bonnet
12	40140102	Renewable seat	30	40950027	O-ring

ITEM	PART #	DESCRIPTION
31		Plastic retainer
32	41001001	O-ring
33		Stem
	40140147	Diverter stem assy. (items 20, 23, 26-33)

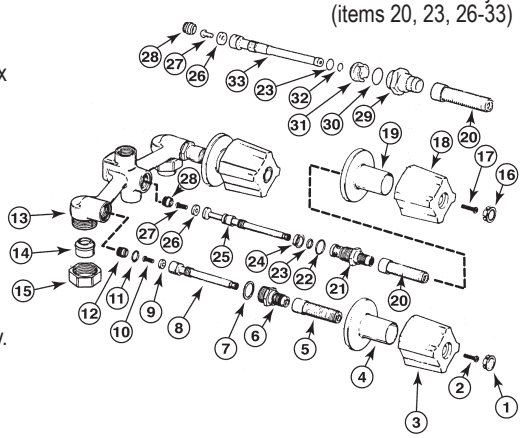

FAUCET REPAIR

KOHLER DALNEY, DALTON, DENTON & TIPTON BATH & SHOWER FITTINGS K-7032, K-7042, K-7100, K-7210

ITEM	PART #	DESCRIPTION
1	40140365	Seat
2	40140466	Stem
3	40140433	Sleeve
4	40140367	Gasket
5	09891630	Bonnet nut
6	40140434	Stem packing
7	40140340	Packing nut
8	40140435	Adjusting sleeve
9	40140436	Escutcheon
10	09891228	Diverter handle
11	40700508	Screw
12	40140459	Barrel
13	40140349	Stem L.H.
	43401066	Stem R.H.
14	40140437	Washer
15	40140438	Spacer
16	40140367	Gasket
17	40700508	Bonnet nut
18	40140434	Stem packing
19	40140340	Packing nut
20	40140435	Adjusting sleeve
21	40140436	Escutcheon
22	40140467	Handle - cold
	40140468	Handle - hot
23	40700508	Handle screw
24	40140342	Nut
25	40140341	Coupling nut

BONNET KIT
40211298
ITEMS 17, 18, 19, 20
AND/OR 5, 6, 7, 8

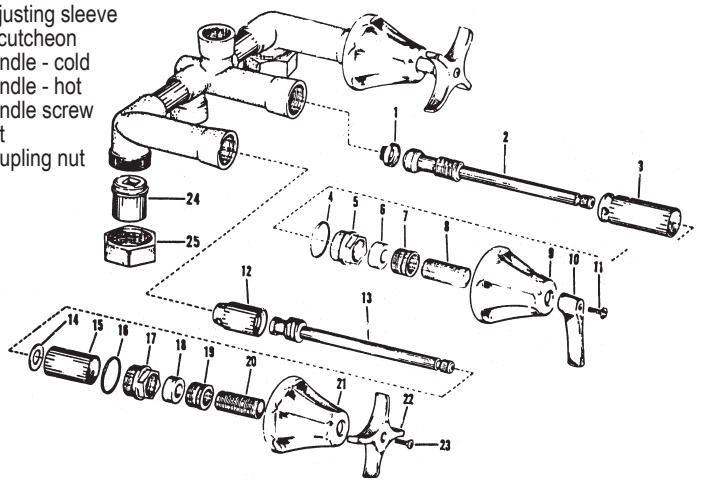

KOHLER AQUARIC SHOWER & BATH FITTINGS K-10106, K-10116 & K-10120

ITEM	PART #	DESCRIPTION
1	40700508	Handle screw
2	40140467	Handle - cold
	40140468	Handle - hot
3	40700508	Screw
4	40140405	Escutcheon
5	40140406	Lock ring
6	40140321	Screw
7	40140469	Bonnet
8	40950037	O-Ring
9	09890160	Washer
10	40950023	O-Ring
11	40140031	Washer
12	40140141	Stem
13	40140105	Plunger
14	40110118	Washer
15	40140321	Screw
16	40150081	Sleeve
17	40140173	Seat
8-17	40140470	Stem assy. L.H.
18	40700508	Screw
19	09890166	Handle - plain
20	40700508	Screw
21	40140405	Escutcheon
22	40140406	Lock ring
23	40140321	Screw
24	40140469	Bonnet
25	40950037	O-Ring
26	09890160	Washer
27	40950023	O-Ring
28	40140031	Washer
29	40140141	Diverter stem
30	09890280	Plunger assy.
31	09890278	Sleeve
32	09891070	Seat
33	09891080	Plunger
34	09891078	Washer
35	50100009	Screw
25-35	43405003	Diverter stem assy.
36	40140342	Union
37	40140341	Union nut

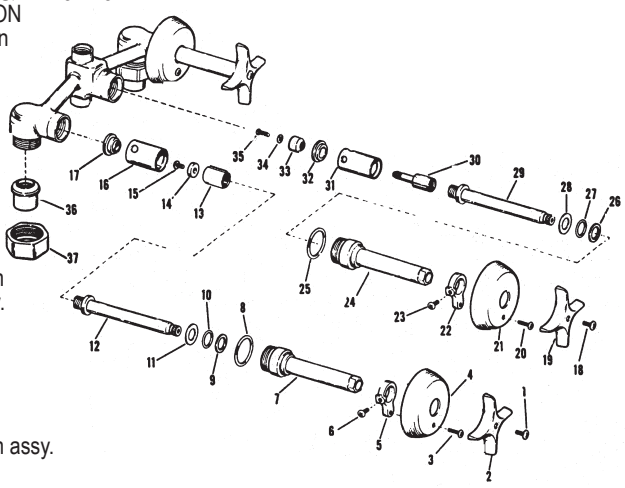

KOHLER TRITON & CONSTELLATION

ITEM	PART #	DESCRIPTION
1	09893930	Handle screw
2	40140344	Triton handle - cold
	40140345	Triton handle - hot
3	40140167	Escutcheon
4	40140009	Bonnet
5	40950037	O-Ring
6	40950023	O-Ring
7	40140031	Washer
8	40140150	Stem - hot & cold
	40140158	Stem - hot (Triton)
9	40140105	Plunger - hot & cold
	40140178	Plunger - hot (Triton)
10	40110118	Seat washer
11	40140321	Screw
12	40150081	Sleeve
13	40140173	Renewable seat
6-13	40140034	Hot & cold stem assy.
	40140035	Hot stem assy. - Triton
14	50100033	Screw
15	09891057	Diverter handle
16	40140167	Escutcheon
17	40140009	Bonnet
18	40950037	O-Ring
19	40950023	O-ring
20	40140031	Washer
21	40140150	Stem
22	40140397	Sleeve
23	40140398	Stem (plunger)
24	09891070	Seat
25	09891080	Diverter seat
26	50100009	Screw
27	40140341	Union nut
28	40140342	Union for 1/2" IP
29	09891056	Handle - cold
	09891058	Handle - hot
30	50100033	Handle screw

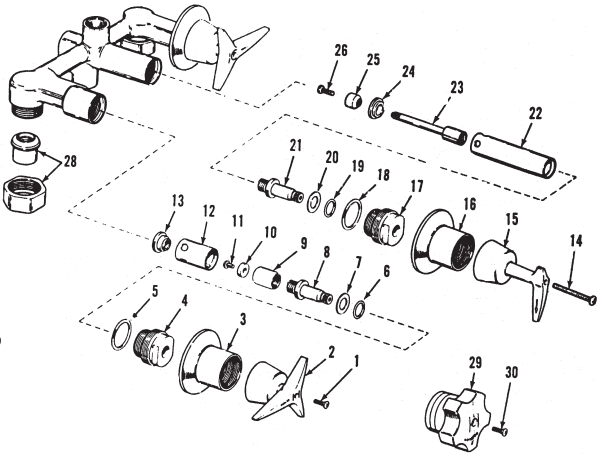

TOTAL MAINTENANCE SOLUTIONS

HOUSTON 800/392-5066
ORLANDO 800/327-3022
GREENVILLE 800/476-2212

LOOK FOR US ON THE WEB AT: www.TMSSouth.com

KOHLER NIEDECKEN EXPOSED MIXER PARTS (KNEE ACTION FITTING)

ITEM	PART #	DESCRIPTION
1	40140454	Dial bushing
2	09894702	Dial for K-13715/K-13710
3	40140450	Stuffing nut
4	09890840	Stem packing
5	09890780	Bushing
6	40140449	Stem
7	40140453	Nut
8	40140452	Stem packing
9	40140451	Regulating screw
10	40140448	Cover screws & gasket
12	40140363	Cover
13	40140447	Cover gasket
14	40140445	Screws (2)
15	40140444	Spring (2)
16	40140443	Yoke
17	40140362	Disc holder (see 22 & 23)
18	40140361	Disc holder (see 22 & 23)
19	40140442	Seat washer (2)
20	40140441	Hot plunger
21	40140440	Cold plunger
14-21	40140446	Yoke & plunger assy. for K-3715
	09890844	Yoke & plunger assy. for K-3710
22	40140439	Renewable seat w/gasket
	09890788	Seat wrench for exposed Niedecken valve

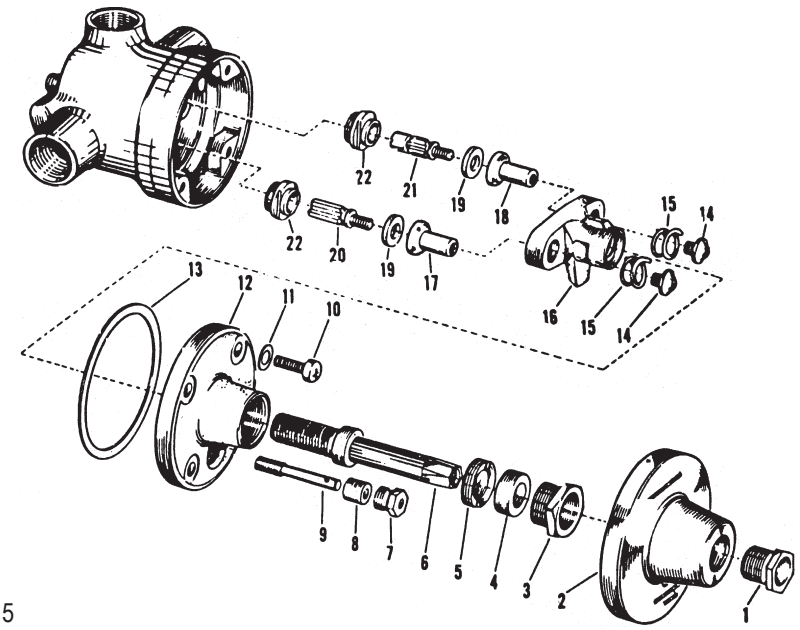

Stirrup handle and screw are available

KOHLER NIEDECKEN BUILT-IN MIXER
K-7000, K-7027-28, K-7076, K-7205, K-7224, K-7300-01

ITEM	PART #	DESCRIPTION
1	40140409	Screw
2	09891068	Handle
3	40140357	Sleeve
4	09890920	Dial screw
5	NLA	Cover
6	40140410	Packing nut
7	09890840	Stem packing
8	09890780	Bushing
9	40140411	Stem 3-5/8"
	40140412	Stem 3-1/32"
10	40140287	Cover screw
11	40140413	Packing nut
12	40140414	Packing
13	40140415	Regulating screw
14	40140416	Cover
15	40140417	Gasket
16	NLA	
17-20		See item 17-22
21	40140418	Seat washer
22	40140426	Cold plunger
	40140425	Hot plunger
17-22	09891470	Yoke assy. - bottom outlet includes item 7 & 15
	09891480	Yoke assy. - top outlet includes items 7 & 15
23	40140366	Renewable seat
24	40140419	Seat gasket
25		Body
	40140427	Repair kit (items 7, 15, 21, 23, 24)
	09890845	Niedecken seat wrench (not shown)

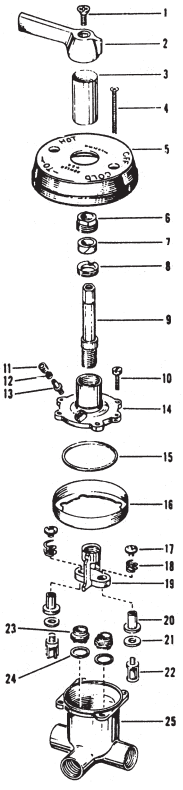

KOHLER NIEDECKEN BUILT-IN MIXER
K-6975-76, K-6977-78, K-6979-80, K6981-84

ITEM	PART #	DESCRIPTION
1	40140409	Screw
2	09891068	Handle
3	40140358	Sleeve
4	09890920	Dial screw
5	40140420	Dial
6	40140410	Packing nut
7	09890840	Stem packing
8	09890780	Bushing
9	40140412	Stem
10	40140287	Cover screw
11	40140413	Packing nut
12	40140414	Packing
13	40140415	Regulating screw
14	40140416	Cover
15	40140417	Gasket
16	40140421	Shield
17	40140422	Yoke
18	40140423	Cold disc holder
19	40140424	Hot disc holder
20	40140418	Seat washer
21	40140425	Hot plunger
22	40140426	Cold plunger
17-22	09891470	Yoke assy. – bottom outlet includes item 7 & 15
	09891480	Yoke assy. - top outlet includes items 7 & 15
23	40140366	Renewable seat
24	40140419	Seat gasket
25		Body
	40140427	Repair kit (items 7,15,21,23,24)
	09890845	Niedecken seat wrench (not shown)

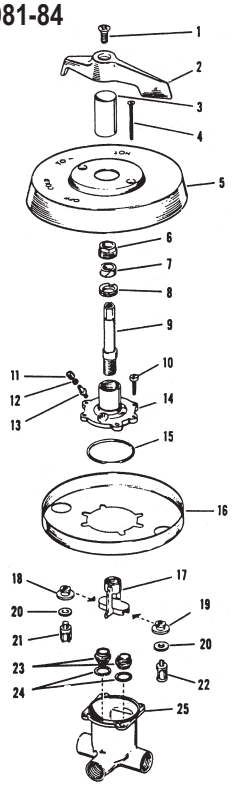

TOTAL MAINTENANCE SOLUTIONS

HOUSTON 800/392-5066

ORLANDO 800/327-3022

GREENVILLE 800/476-2212

LOOK FOR US ON THE WEB AT: www.TMSSouth.com

FAUCET REPAIR

KOHLER CENTURA SINK FITTING

ITEM	PART #	DESCRIPTION
1	40140298	Index plug button
2	40140299	Handle screw
3	40140300	Knob & grommet
4	40140301	Grommet
5	40140302	Lever
6	40140303	Snap ring
7	40140304	Lever collar assy.
8	40140305	Screw
9	40140306	Cam bearing cover
10	40140307	Cam bearing
12-14	40120271	Cam & sleeve kit
13-14	31090212	Cartridge kit
11-14	40140001	Sleeve , gasket,cartridge & cam kit
15	40140379	Spout w/ aerator
16	40110130	Aerator
17	40950074	O-Ring
18	40140380	Spout bearing & washer kit
19	40140351	Washer
20	40140352	Wire clip (see item 21)
21	40140309	Diverter kit
22	40140381	O-Ring
34	40140310	Index button - clear
35	40140311	Handle screw
36	09893318	Handle
37	40140305	Screw
38	40140306	Cam bearing cover
39	40140382	Cam bearing

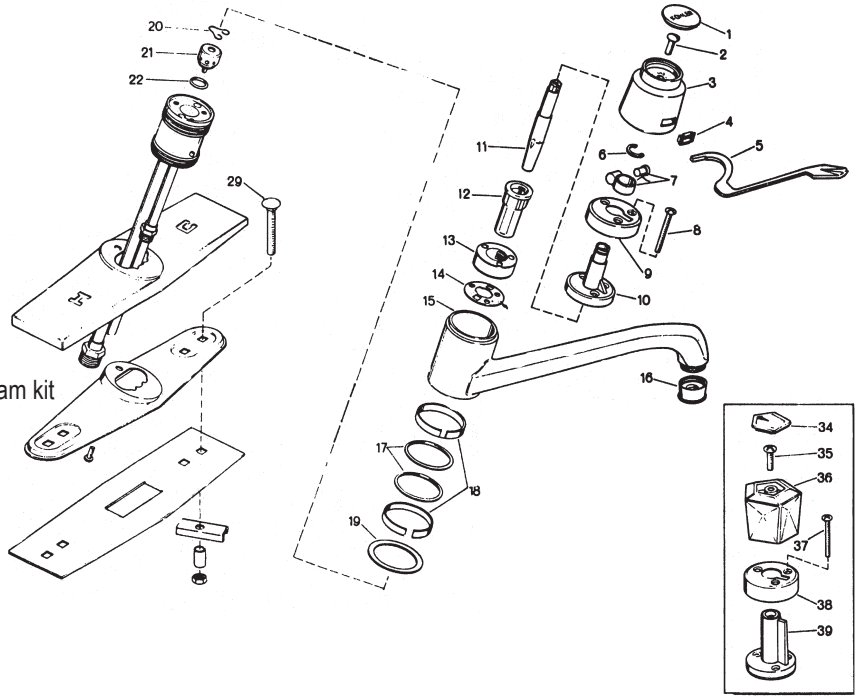

KOHLER CORALAIS SINK FITTING

ITEM	PART #	DESCRIPTION
1	40140271	Plug button – Hot & Cold
2	40140383	Handle screws (2)
3	40140465	Handles – Hot & Cold
4	40140384	Bonnets (2)
5	40140269	Valve assembly
8	40140385	Spout cap CP
9	40140386	Spout washer kit
10	40140333	Diverter
11	40140387	Spout w/ aerator
12	09891435	Spout aerator

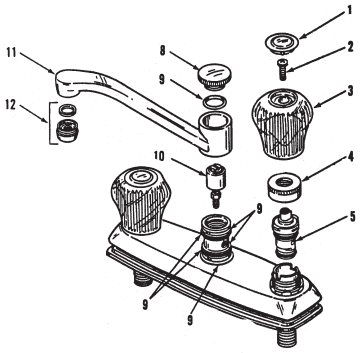

KOHLER FLAIR II SINK FITTINGS

ITEM	PART #	DESCRIPTION
1	40140313	Flair handle kit (Hot & Cold)
	09891638	Index cap – pair (H&C)
2	09891439	Escutcheon CP (2)
3	09892560	Washer
4	40140159	Spline adapters (2)
5	40140003	Cartridge
6-7	09891552	Washer & locknut
9	09891435	Aerator CP
9-11	40140376	Spout kit
12	09892504	Spout escutcheon
13	40140255	Diverter
17	40140377	Spout assy. CP
18	40950036	O-ring
19	40140375	Ring bushing
21	09892565	Spout escutcheon

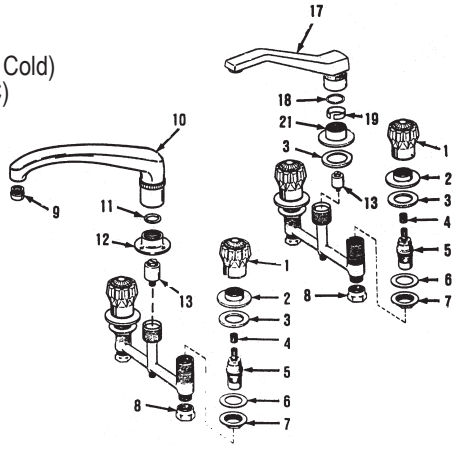

KOHLER CORALAIS SINGLE HANDLE SINK FITTING

ITEM	PART #	DESCRIPTION
1-3	40140314	Lever handle kit CP
4	40121076	Cap kit CP
5	40121077	Bonnet CP
6	40140483	Valve kit (item 6 & 7, 2 of item 8)
7-8	40140316	Washer kit
9	40140388	Spout kit CP (items 9, 10, 11)
10-11	09891435	Aerator
12-13	40140317	Diverter
14-17	40140318	Spout service kit

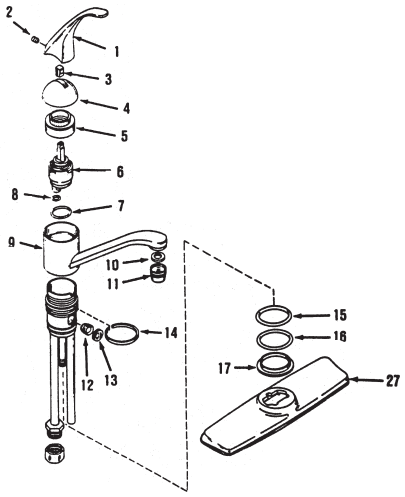

TMS TOTAL MAINTENANCE SOLUTIONS

HOUSTON 800/392-5066
ORLANDO 800/327-3022
GREENVILLE 800/476-2212

LOOK FOR US ON THE WEB AT: www.TMSSouth.com

KOHLER TRITON & CONSTELLATION

ITEM	PART #	DESCRIPTION
1	09893930	Handle screw
2	40140319	Handle – cold
	40140320	Handle – hot
3	40140008	Bonnet
4	40950038	O-ring
5	40950023	O-ring
6	40140031	Washer
7	40110118	Seat washer
8	40140321	Screw
9	40140173	Renewable seat
10	40140150	Hot & cold stem
	40140158	Cold stem (Triton)
11	40140178	Hot & cold plunger, plastic
	40140108	Brass plunger (hot)
	40140322	Brass plunger (cold)
	40140105	Cold plunger (Triton), plastic
12	40150081	Sleeve
5-12	40140011	Hot & cold assy.
	40140134	Cold stem assy.
13	09892100	Spacer
14	40140042	Locknut
15	40800454	Coupling nut
16	40140368	Spout cap
	09892180	Post – or soap dish
	09892190	Cap nut for soap dish
17-18	40950028	O-ring
19	40140370	Spout post 1-5/16"
	40140371	Spout post 1-11/16"
20	40140323	Gasket
21-22	40140255	Diverter
23	40140324	Spout (15/16")
	40140369	Spout (1-5/16")

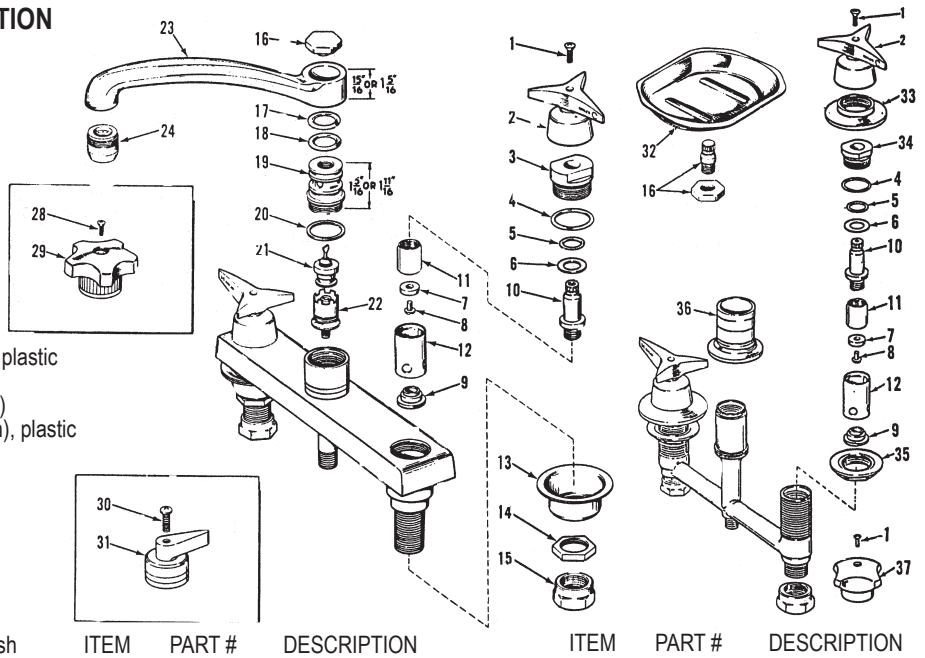

ITEM	PART #	DESCRIPTION
24	40110124	Aerator
28	50100033	Handle screw
29	09892070	Handle – cold
	09892080	Handle – hot
30	40700508	Handle screw
31	40140325	Handle – cold
	40140326	Handle – hot

ITEM	PART #	DESCRIPTION
32	09892320	Soap dish
33	40140327	Flange w/ washer
34	40140007	Bonnet
35	09890276	Locknut
36	09892556	Escutcheon
37	40140015	Handle – cold
	40140014	Handle – hot

KOHLER TREND & SHOREHAM KITCHEN FITTINGS

ITEM	PART #	DESCRIPTION
1	40140151	Index button – blue
	40140187	Index button – red
2	50100009	Screw
	09891486	Handle screw (acrylic)
3	40140329	Clear acrylic handle
	40140142	Chrome handle
4	40140330	Bonnet
	40140378	Bonnet for cold lever handle
5	40140462	Stem
	40140461	Stem - cold for lever handle
6	40950022	O-ring
7	40110118	Seat washer
8	50100009	Screw
4-8	40140005	Hot & cold stem assy.
	40140010	Cold stem assy. – lever handle
9	40140331	Gasket
10	40140102	Renewable seat
11		Body
12	09892350	Aerator
13	40140332	Spout w/ aerator
14	40950036	O-ring
15	40140333	Diverter
16	40800529	Washer
17	51000048	Locknut
18	40800454	Coupling nut
19	09891438	Flange
20	40140334	Hot & cold stem assy.
	40140335	Cold stem assy. – lever handle

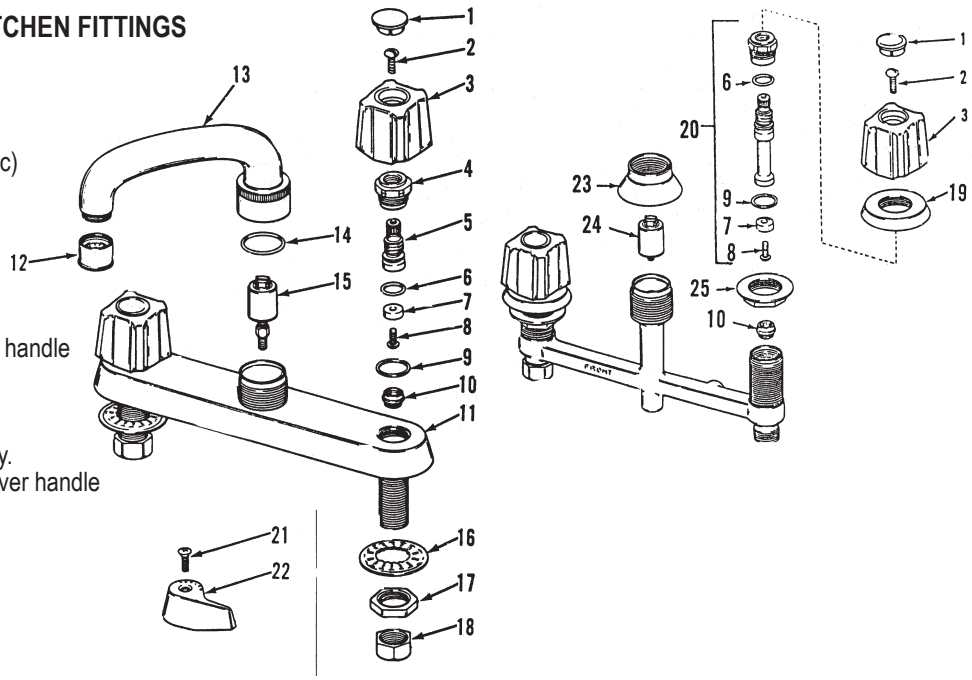

ITEM	PART #	DESCRIPTION
21	50100033	Handle screw
22	40140475	Handle – hot
	40140474	Handle – cold

ITEM	PART #	DESCRIPTION
23	09890425	Spout flange
24	40140255	Diverter
25	09894910	Brass locknut

TOTAL MAINTENANCE SOLUTIONS

HOUSTON 800/392-5066

ORLANDO 800/327-3022

GREENVILLE 800/476-2212

LOOK FOR US ON THE WEB AT: www.TMSSouth.com

FAUCET REPAIR

KOHLER CORALAIS SINK FAUCET W/ PULL-OUT SPRAY

ITEM	PART #	DESCRIPTION
1-3	40140314	Lever handle kit
4	40121076	Cap, molded chrome
5	40121077	Bonnet
6	40140122	Valve kit
		(items 6 & 7, 2 of item 8)
7-8	40140316	Washer kit
9		Hub insert assembly
10	09896230	Hose
11	09896232	Gasket
12	09896234	Restrictor, backflow
12-14	09896240	Spray – white
14	09896236	Aerator
15	09896238	Bearing – spout
16		Flow control
17		Washer
18		Check valve duckbill
19		Check valve fitting
20		Coupling nut
23	40140442	Washer
24		Hose
25		Nut
26		Vacuum breaker
27		Cover
28		Escutcheon shank
29	40950083	O-ring
30		Shroud
31		Undercover
32		Stud
33		Channel
34		Wing nut

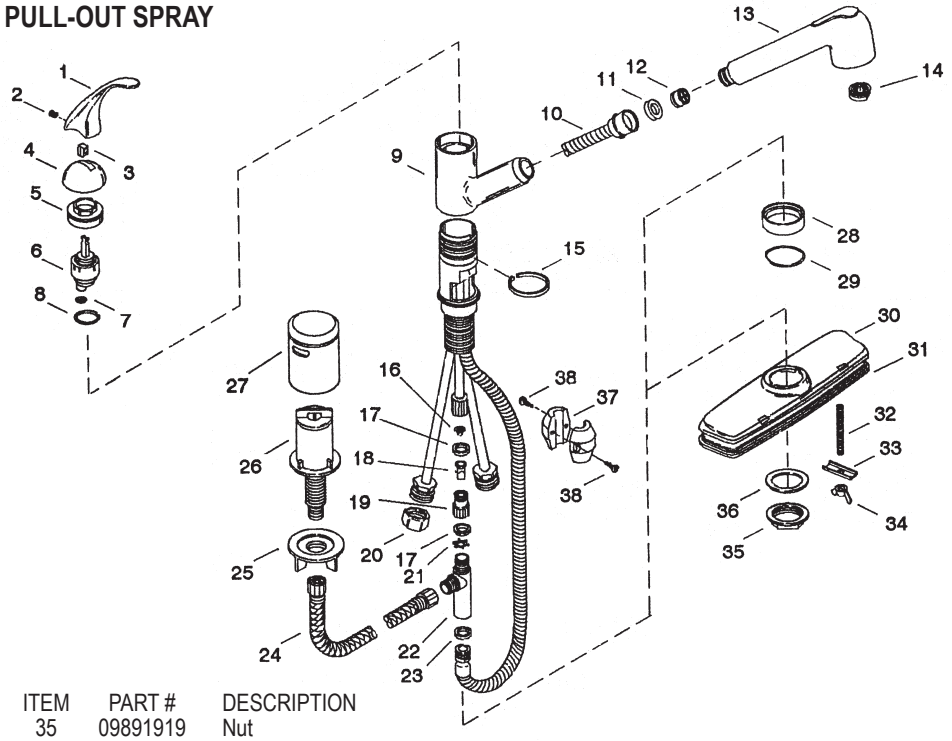

ITEM	PART #	DESCRIPTION
35	09891919	Nut
36	09891930	Washer
37		Weigh, lead
38		Screw

KOHLER TRITON K-7827, K-7832 KITCHEN FAUCET W/SPRAY

ITEM	PART #	DESCRIPTION
1		Spout assembly (9-1/2")
2	40140376	Spout assembly (8")
3	40110130	Aerator
4	40950036	O-ring
5	40140375	Lower bushing
6	40140255	Diverter
7	40800454	Nut
8	21940315	Nut
9	09892100	Washer
10		Valve body
14	40140003	Ceramic valve (clockwise close)
	40170016	Ceramic valve (counter clockwise close)
15	09893406	Spline adapter (not for wrist handle)
16	40140463	Polished chrome handle & bonnet
17	40140488	Wrist blade handle assembly
18	40140487	Lever handle
19	40140486	4-Prong handle & bonnet assembly
20	09896202	Handle screw
21	40140373	Button cap – blue
	40140374	Button cap – red
22	40140372	Button cap – chrome
23	50100033	Screw
24	50100033	Screw
25	09896212	Screw

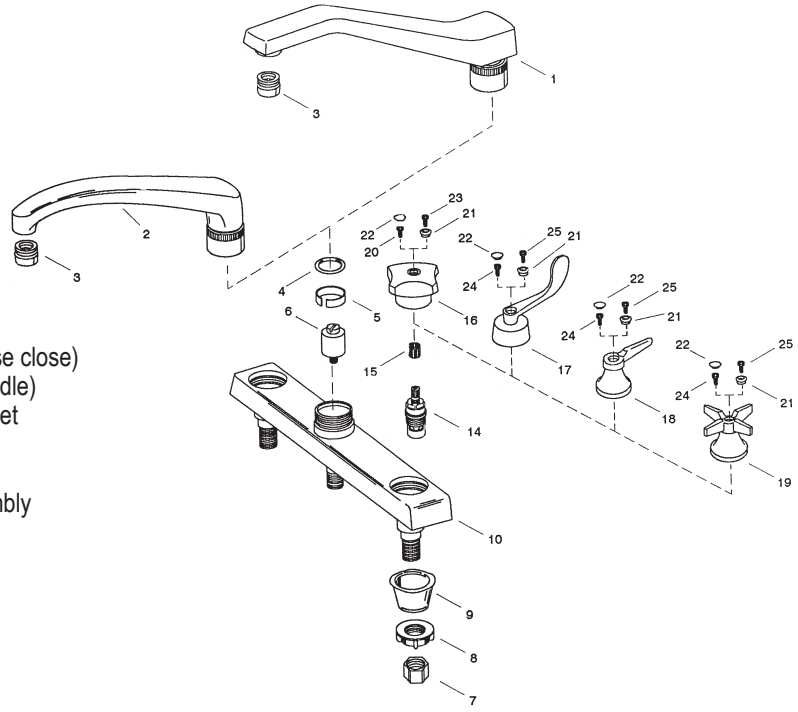

TOTAL MAINTENANCE SOLUTIONS

HOUSTON 800/392-5066
ORLANDO 800/327-3022
GREENVILLE 800/476-2212

LOOK FOR US ON THE WEB AT: www.TMSSouth.com

KOHLER WALL MOUNT FITTINGS K-8904, K-8905-06, K-8924-27, K-8928-29
HOSPITAL SINK FITTINGS K-13583-85, K-13595-96

ITEM	PART #	DESCRIPTION
1	40700508	Handle screw
2	40140124	Handle – hot
	40140123	Handle – cold
3	09892647	4" Wrist handle – hot
	09892646	4" Wrist handle – cold
	09892649	6" Wrist handle – hot
	09892648	6" Wrist handle – cold
4	09892160	Bonnet
5	40950037	O-Ring
6	40950023	O-Ring
7	40140031	Washer
8	40140158	Stem – hot
	40140150	Stem – cold
9	40140178	Plunger – hot
	40140105	Plunger – cold
	40140108	Brass plunger – hot
	40140322	Brass plunger – cold
10	40110118	Seat washer
11	40140321	Screw
12	40150081	Sleeve
13	40140173	Renewable seat
14	40140011	Stem assy. – hot
	40140134	Stem assy. – cold
	40140035	Stem assy. – cold w/ brass plunger
	40140034	Stem assy. – hot w/ brass plunger
15		Flange
16	09892596	Coupling nut
17		Eccentric shank
18	40140052	Washer
19	09891722	Key
20		Bonnet nut
21	40950048	O-Ring
22	09892550	Washer
23	09892508	Washer
24	09891622	Stem
25	40110118	Seat washer
26	50100009	Screw
27	40140113	Seat
28		Flange
29		Body
19-29	09891590	Loose key stop assy.
30	09892320	Soap dish
31	09892180	Post
32	09892190	Nut
33	40140324	Spout w/ aerator 15/16"
	40140369	Spout w/ aerator 1-5/16"
34	40110124	Spout aerator
35	40950028	O-Ring

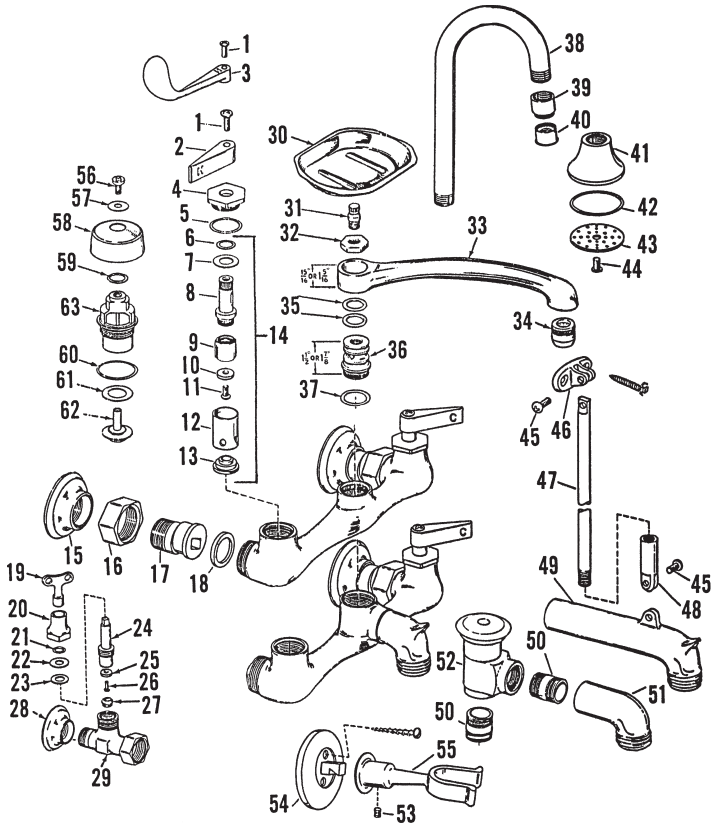

ITEM	PART #	DESCRIPTION
36		Spout post 1-1/2" or 1-7/8"
37	40950026	O-Ring
38	09892272	Low spout (K-13583-84)
	09891808	High spout (K-13585-95-96)
39	09891956	Adapter
40	09892350	Aerator
41		Body
42		Gasket
43		Spray face
44		Screw
42-44	09891574	Spray face S/A
41-44	09891258	Spray face S/A
45-48		Rod S/A
49		Spout

ITEM	PART #	DESCRIPTION
50	09891225	Nipple
51		Spout
52	09890776	Vacuum breaker
53		Set screw
53-55		Wall hook S/A
56	09893912	Screw
57	09893665	Washer
58	09892870	Hood
59	40950023	O-Ring
60	09893510	Gasket
61	09893780	Gasket
62	40140188	Check plunger
56-62	40140121	Check valve kit
63	09892880	Check guide sub assy.

KOHLER LAUNDRY TRAY FITTING K-8950, K-8955

ITEM	PART #	DESCRIPTION
1	40700508	Handle screw
2	40140124	Handle – hot
	40140123	Handle – cold
3	09892160	Bonnet
4	40950037	O-Ring
5	40950023	O-Ring
6	40140031	Washer
7	40140158	Stem – hot
	40140150	Stem – cold
8	40140105	Plunger – hot
	40140178	Plunger – cold
9	40110118	Seat washer
10	40140321	Screw

ITEM	PART #	DESCRIPTION
11	40150081	Sleeve
12	40140173	Renewable seat
5-12	40140011	Stem assy. – hot
	40140134	Stem assy. – cold
13		Union joint
14	40140341	Union nut
15-18	09891565	Spout nut & packing kit
17	09892578	Washer
19		Spout

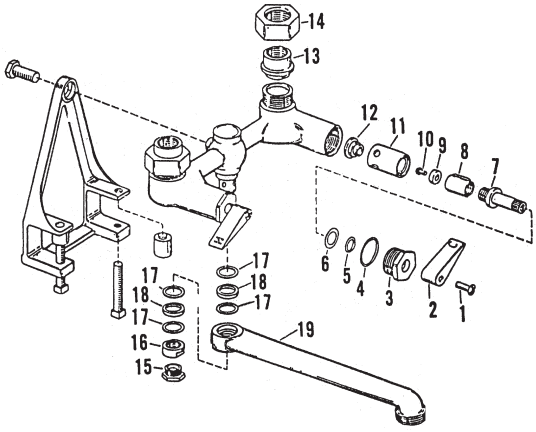

TOTAL MAINTENANCE SOLUTIONS

HOUSTON 800/392-5066
ORLANDO 800/327-3022
GREENVILLE 800/476-2212

LOOK FOR US ON THE WEB AT: www.TMSSouth.com

FAUCET REPAIR

KOHLER K-6882 & K-6883 CENTURA FITTING

ITEM	PART #	DESCRIPTION
1	40140310	Index button – clear
2	40140311	Handle screw
3	09893318	Clear acrylic handle
	09893320	Amber acrylic handle
4	40140305	Screw
5	40140306	Cam cover
6	40140382	Cam bearing
7	09893200	Gasket
8-11	40140001	Cam & sleeve kit
9	09893270	Sleeve
9-11	09893260	Cartridge/sleeve/gasket
11	09893240	Gasket
12		Metal shroud
13		Body
14	40110124	Aerator
15		Underbody cover
16		Screw
17		Strap
18	50100009	Screw
24	40140131	Stopper
25	09892486	Drain body
26	40140060	Gasket
27	40140059	Washer
28	09890448	Locknut
29	50552293	Tailpiece
30	40140148	Gasket
31	09890450	Bonnet
32	09890470	Washer
33	09892505	Ball lever
34	09890470	Washer
35	09890460	Packing
36	09890190	Clip
30-36	40140149	Ball lever assy.
37	09893670	Connecting rod
38	09890230	Screw
39	40140153	Nut
40	09890118	Lift rod
41	40140298	Plug button S/A
42	40140299	Screw
43	40140300	Knob CP
44	40140301	Grommet
45	40140302	Lever
46	40140303	Snap ring
47	40140304	Lever collar
48	40140305	Screw
49	40140306	Cover
50	40140307	Cam bearing
41-50	09893230	Conversion kit

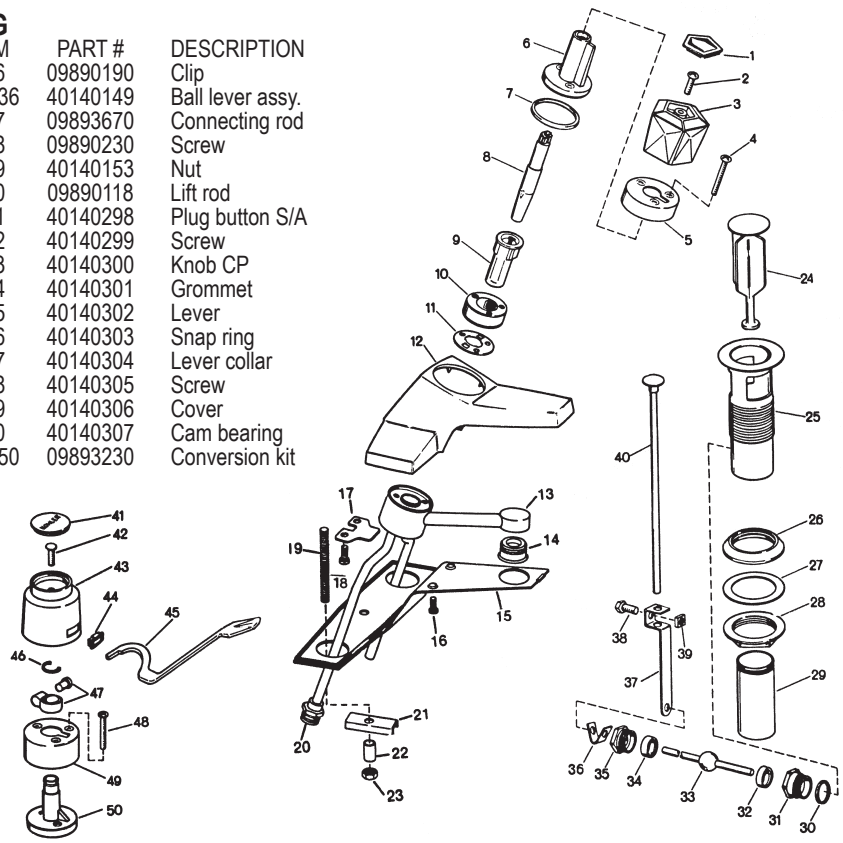

KOHLER TRITON & CONSTELLATION CENTRA FITTINGS K—6960, K-7401, K-7403-K-7406, K-7408-7409

ITEM	PART #	DESCRIPTION
1	09893930	Handle screw
2	40140319	Handle – cold
	40140320	Handle – hot
3	40140008	Bonnet
4	40950037	O-Ring
5	40950023	O-Ring
6	40140031	Washer
7	40140150	Hot & cold stem (used with item 20)
	40140158	Cold stem
8	40140178	Hot & cold plunger (use w/ #40140150)
	40140105	Cold plunger
9	40110118	Seat washer
10	40140321	Screw
11	40150081	Sleeve
12	40140173	Renewable seat
5-12	40140011	Hot & cold stem assy. (plastic)
	40140134	Cold stem assy. (plastic)
	40140034	Hot stem assy (brass)
	40140035	Cold stem assy (brass)
13	09893680	Lift rod
14	40110124	Aerator
15		Body
16	09892100	Spacer
17	40140042	Locknut
18	09891784	Coupling nut
19	50100033	Screw
20	09892070	Handle – cold
	09892080	Handle – hot
21	40140013	Handle – cold
	40140012	Handle – hot
22		Body (Triton II)
23	09891276	Index cap - white
24	40700508	Handle screw
25	09891275	Handle
26	09892760	Clear handle assy. – cold
	09892770	Clear handle assy. – hot
27	09891277	Index cap – black

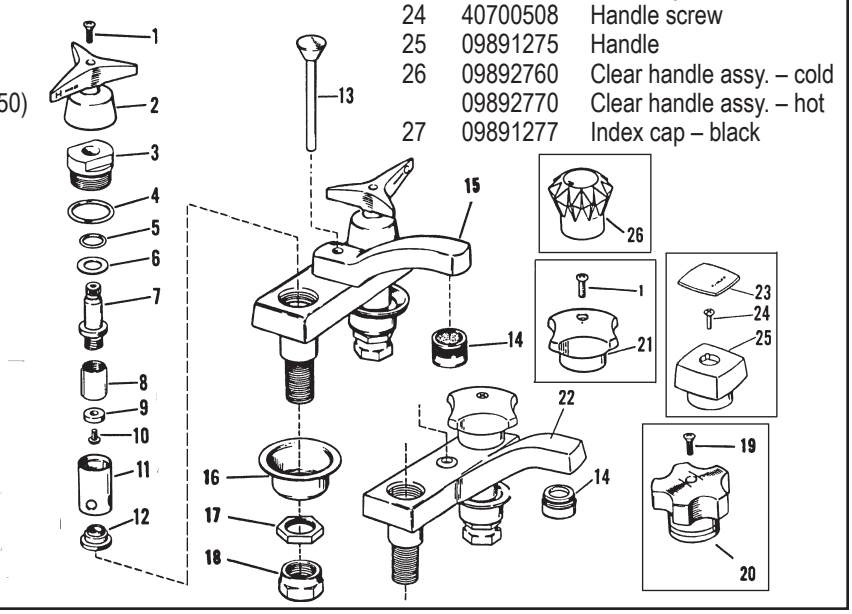

TOTAL MAINTENANCE SOLUTIONS

HOUSTON 800/392-5066
ORLANDO 800/327-3022
GREENVILLE 800/476-2212

LOOK FOR US ON THE WEB AT: www.TMSSouth.com

KOHLER TREND LAVATORY K-11800 SERIES

ITEM	PART #	DESCRIPTION
1	40140151	Index button – blue
	40140187	Index button – red
2	50100009	Handle screw
3	40140142	Chrome handle – old style
4	09893945	Plug button – red
	09893950	Plug button – blue
5	40140126	Chrome handle – new style
6-11	40140010	Cold stem assembly
	40140005	Hot stem assembly
8	40950022	Stem o-ring
9	40110118	Seat washer
10	50100009	Bibb screw
11	40140331	Washer
12	09890405	Lift Rod
14	40110132	Aerator
18	40995020	Extension strap w/ screw
19	09890190	Spring clip
20		Nut
21	09896244	Rod assembly
22	09896246	Ball lever seat
23	40140190	Stopper w/ o-ring
24	40950064	O-ring

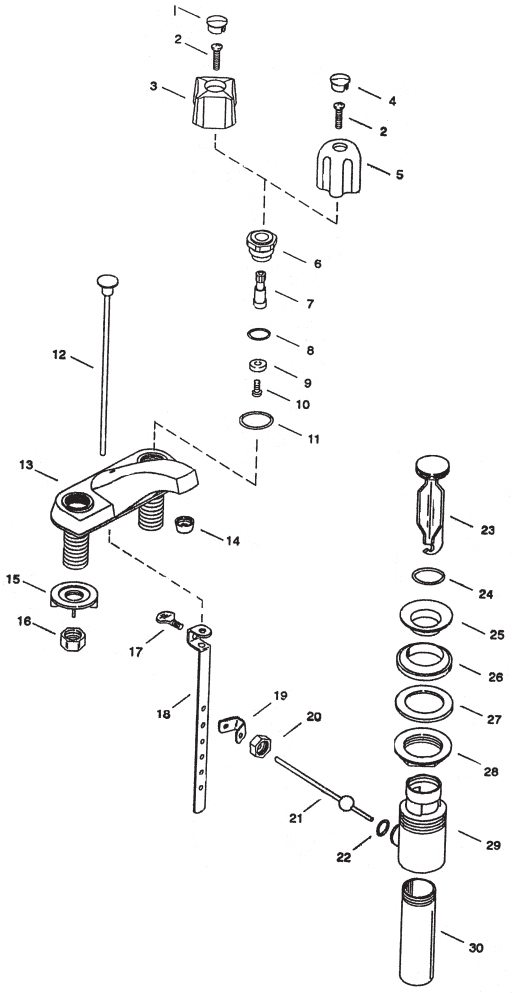

KOHLER TOUCHLESS ELECTRONIC FAUCET

ITEM	PART #	DESCRIPTION
1	40110166	V.P. aerator with wrench
2	45972020	V.P. aerator with wrench
3		O-ring
4	09896248	Sensor
5	09896250	Valve assembly
6		Gasket

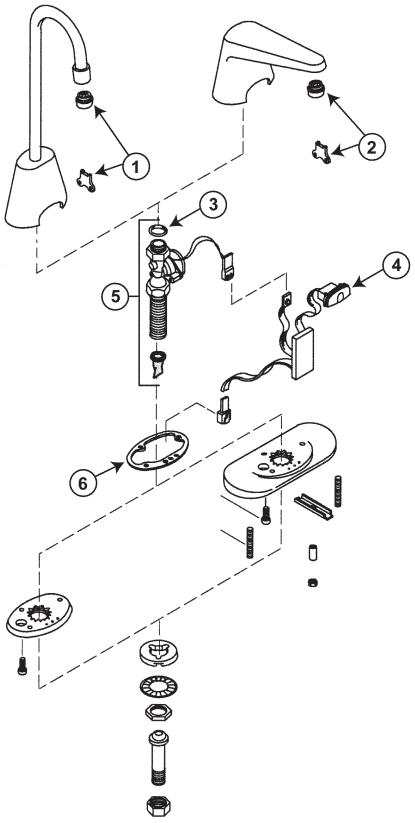

KOHLER CORALAIS K-15181 FITTING

ITEM	PART #	DESCRIPTION
1-3	09894978	Lever handle kit CP
4	40121076	Cap – lever handle
5-7	09891577	Knob kit
8	09895006	Cap – knob handle
9	09895004	Escutcheon CP
10-12	40140122	Valve
14	40110130	Female aerator
20	09896048	Pull rod
	40140119	Cartridge
	09896280	Seal kit

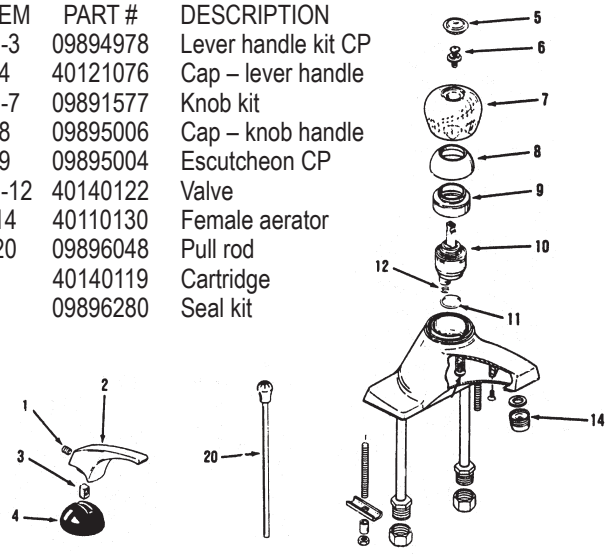

FAUCET REPAIR

KOHLER CORALAIS K-15240-41 FITTING

ITEM	PART #	DESCRIPTION
1	40140271	Plug buttons (hot & cold)
1-3	09894560	Handles (hot & cold)
4	09896058	Bonnets (2)
5	40140269	Valve assembly hot & cold
	40140464	Valve assembly cold (lever handle)
8	09896048	Lift rod
9-10	09891436	Aerator – female
	09891435	Aerator – male
15	09896070	Handle kit – blade (hot & cold)

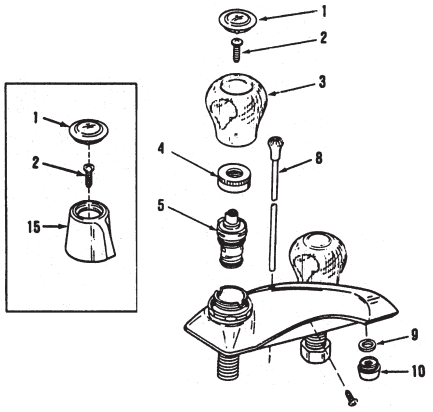

KOHLER CORALAIS K-12561 FITTING

ITEM	PART #	DESCRIPTION
1	09896002	Plug button – cold
	09896004	Plug button – hot
2	09895070	Handle screws (2)
3	09896020	Handle
4	09895060	Bonnet
5	40140269	Stem – hot & cold
	40140464	Stem – cold (lever handle)
6	09896024	Escutcheon
7	09896028	Bushing
8		Valve body
9		Hoses
14	40110130	Aerator – female
	40110144	Aerator – male
18		Nut
19	40140096	Washer
20	40140097	Gasket
21		Tee
22		Washer
23		Gasket
24		Spout

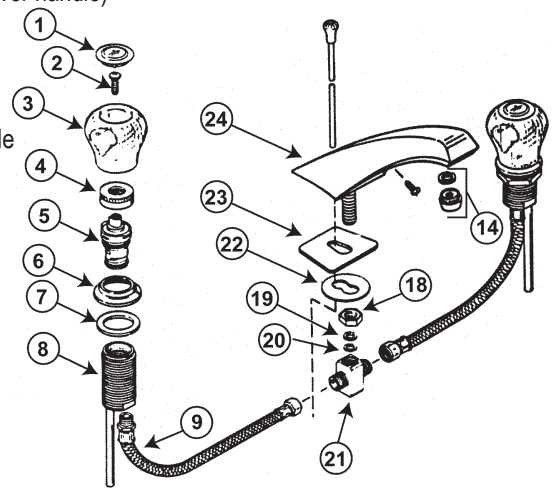

KOHLER FLAIR II HANDLES – NEW STYLE

ITEM	SMALL PART #	LARGE PART #	DESCRIPTION
9	09891638	09891636	Index cap – pair hot & cold
10	09891632	09891634	Screw & washer kit (2 of each)
11	40140313	40140272	Handle kit CP – pair hot & cold

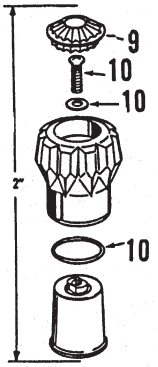

SMALL FLAIR II

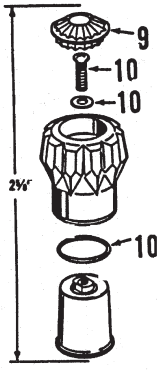

LARGE FLAIR II

Did You Know?

There is the same amount of water on Earth as there was when the Earth was formed. The water from your faucet could contain molecules that dinosaurs drank!

KOHLER TREND & SHOREHAM FITTINGS K-10800, K-11800, K-11800-PH AND K-11800-B

ITEM	PART #	DESCRIPTION
1	40140151	Index button – blue
	40140187	Index button – red
2	50100009	Screw
3	40140329	Clear acrylic handle
	09890760	Charcoal acrylic handle
	40140142	Chrome handle
4	40140330	Bonnet
	40140378	Bonnet for cold lever handle
5	40140462	Stem
	40140461	Stem – cold lever handle
6	40950022	O-ring
7	40110118	Seat washer
8	50100009	Screw
9	40140331	Washer
10	40140102	Renewable seat
11	09890405	Lift rod
12	40110124	Aerator
13	09890230	Screw
14	40140153	Nut
15	09893670	Connecting link
16	09891835	Washer
17	40140042	Locknut
18	09891784	Coupling nut
19	09890190	Clip
19-25	40140149	Ball lever assembly
20	09890460	Socket nut
21	09890470	Bearing
22	09892505	Ball lever
23	09890470	Bearing
24	09890450	Ball socket
25	40140148	Gasket
26	09891560	Stopper
27	09892486	Drain body
28	40140060	Gasket
29	40140059	Washer
30	09890448	Locknut
31	50552293	Tailpiece
32	50100033	Screw
33	40140473	Handle – pair
34	40140005	Hot/cold stem
35	40140010	Cold stem (lever handle)

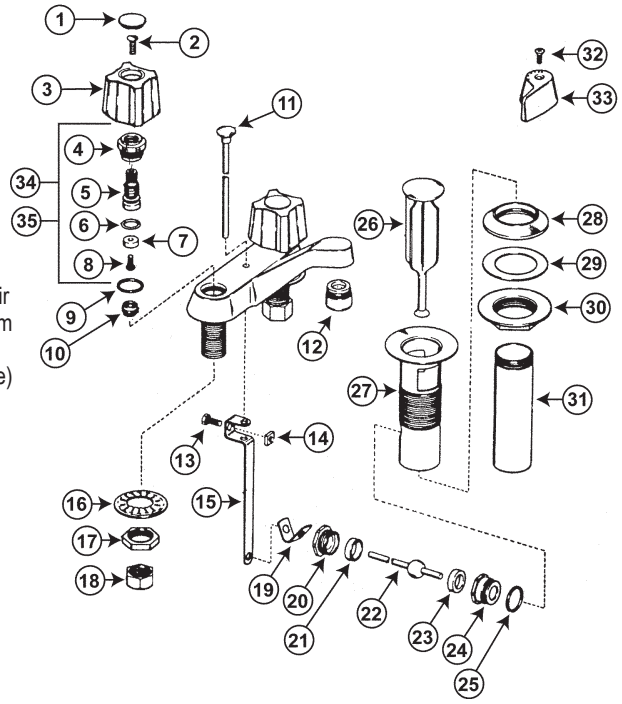

KOHLER TRITON & CONSTELLATION FITTINGS K-7416, 17, 19, K-7436, 37 & 39
ALTERNA, FLAIR & TRITON II K-6952, K-6955, K-7436 & 37-FL, K-7436 & 37-T

ITEM	PART #	DESCRIPTION
1	09893930	Handle screw
2	40140015	Handle – cold
	40140014	Handle – hot
3	09892140	Escutcheon
4	09892270	Washer
5	40140007	Bonnet
6	40950038	O-ring
7	40950023	O-ring
8	40140031	Washer
9	40140150	Stem – hot & cold
	40140158	Stem – cold
10	40140105	Plunger – h/c (plastic)
	40140178	Plunger – cold (plastic)
11	40110118	Seat washer
12	40140321	Screw
13	40150081	Sleeve
14	40140173	Renewable seat
7-14	40140011	Stem assembly (h/c)
	40140134	Stem assembly (cold)
	40140034	Brass stem assembly (cold)
	40140035	Brass stem assembly (hot)
15	09891670	Washer
16	09891955	Locknut
17		Valve body
18	09891784	Coupling nut
19	09890320	Slip joint washer
20	09890330	Friction washer
21	09891784	Coupling nut
22	09893680	Lift rod
23		Spout
24	40110144	Aerator
25, 26	09891840	Washer
27	09891841	Locknut
28		Lift rod sleeve 4" or 4-3/4"
29	40140056	Gasket
30	09892300	Cross connection
31	40140157	Packing
32	09892120	Friction ring
33	09892150	Locknut
34	09891286	Index caps (pk. of 4)
35	40700508	Handle screw
36	09891278	Handle (Alterna)
37	40140116	Clear acrylic handle – cold
	09892759	Clear acrylic handle – hot
38		Spout (Triton & Constellation)
39	09892656	Cold handle (Triton)
	09892657	Hot handle (Triton)
40	50100033	Handle screw
41	09891056	Cold handle (Constellation)
	09891058	Hot handle (Constellation)

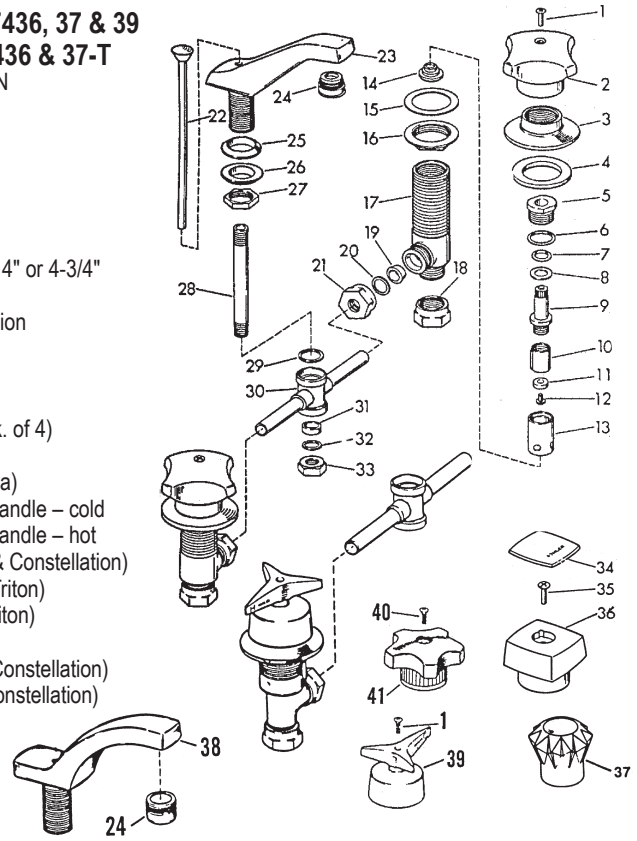

TOTAL MAINTENANCE SOLUTIONS

HOUSTON 800/392-5066

ORLANDO 800/327-3022

GREENVILLE 800/476-2212

LOOK FOR US ON THE WEB AT: www.TMSSouth.com

FAUCET REPAIR

KOHLER TREND WIDESPREAD LAVATORY FITTING K-11810, K-11810-PH, K-11810-B

ITEM	PART #	DESCRIPTION
1	40140151	Index button – blue
	40140187	Index button – red
2	50100009	Screw
	09891486	Handle screw (acrylic)
3	40140329	Clear acrylic handle (small)
	40140142	Chrome handle (small)
	40140263	Clear acrylic handle (large)
	40140176	Chrome handle (large)
4	09891438	Flange
5*	09890420	Bonnet
	09890422	Bonnet for cold lever handle
6*	09890410	Washer
7*	40950022	O-ring
8*	40110118	Seat washer
9*	50100009	Screw
10	40140102	Renewable seat
11*	09890424	Stem
	09890426	Stem – cold lever handle
12		Locknut
13		Body
14	09891784	Coupling nut
15	09891784	Coupling nut
16	09890320	Slip joint washer
17	09890330	Friction washer
18	09891840	Washer
19		Friction washer
20	09891841	Locknut
21	40140056	Gasket
22	40140157	Packing
23	09892120	Friction ring
24	09892150	Locknut
25		Cross connection
26	40110124	Aerator
27		Spout
28	09890405	Lift rod
29	09891366	Handle screw
30	09891524	Shoreham lever handle

* Cold stem assembly #40140138 (LH – use only with lever handle)

* Hot stem assembly #40120175 (RH – use with hot or cold w/ square handle)

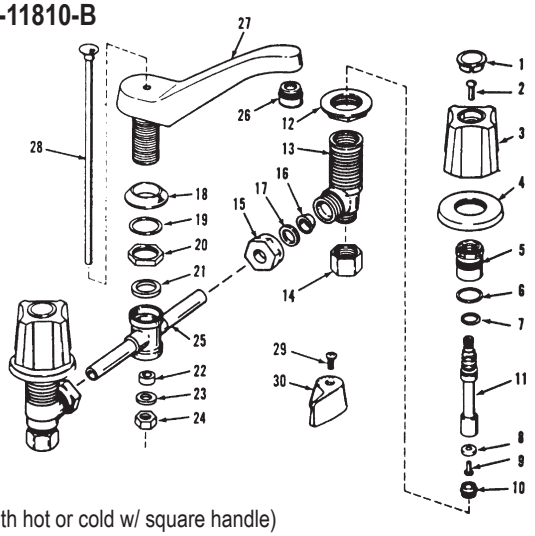

KOHLER SHELF BACK FITTING K-8115-A

ITEM	PART #	DESCRIPTION
1	09891600	Stopper
2	09894900	Strainer body
3	40140060	Gasket
4	09891954	Nut
5	50552293	Tailpiece
6	09891918	Spud
7	09891940	Packing
8	09891820	Washer
9	09891930	Friction ring
10	09891919	Nut
11	09891950	Ball lever
12	09891900	Lock pin
13	09894902	Packing
14	09891890	Friction ring
15	09891870	Spring
16	09891879	Spring retainer
17	09894904	Adjusting link
18	09894906	Nut
19	09894908	Lift rod
20	09892232	Trip lever
21		Cotter pin
22	NLA	
23		Valve body
24	09892158	Push rod
25		Spout
26	40110144	Aerator
27	40140113	Renewable seat
28	09894910	Nut
29	09892157	Flange
30	09891784	Nut
31	50100009	Screw
32	40110118	Seat washer
33	43401031	Stem/washer/screw – hot
	43401032	Stem/washer/screw – cold
34	09891820	Washer
35	09894912	Washer
36	40950048	O-ring
37	09891994	Bonnet Nut
38	40140123	Handle – cold
	40140124	Handle – hot
39	40700508	Handle screw

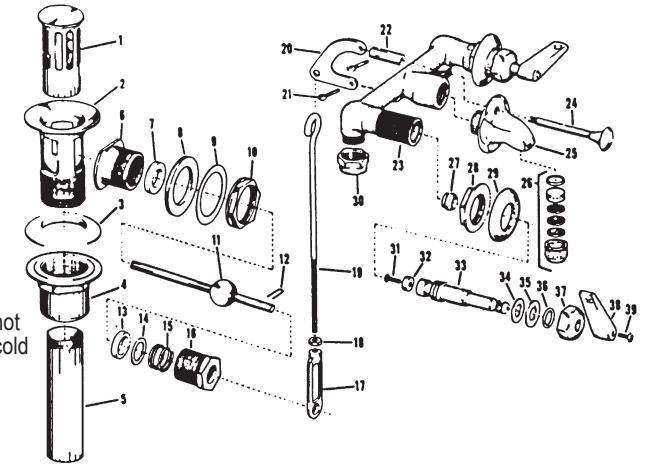

KOHLER SYNCHRO POP-UP DRAIN PARTS K-7701

ITEM	PART #	DESCRIPTION
1	09890405	Lift rod
2-4	09890476	Flange & nut assembly
5	09890230	Screw
6	40140153	Nut
7	09893670	Connecting rod
8	09890190	Clip
9	09892489	Packing nut
10	09892500	Washer
11	09892490	Packing
12	09890464	Ball lever
13	09892490	Packing
14	09892488	Housing
15	40140148	Gasket
8-15	09892505	Ball lever assembly
16	40140131	Brass stopper
17	09892486	Drain body
18	40140059	Washer
19	40140060	Gasket
20	40140059	Washer
21	09890448	Locknut
16-21	09890380	Drain & stopper assembly
22	50552293	Tailpiece

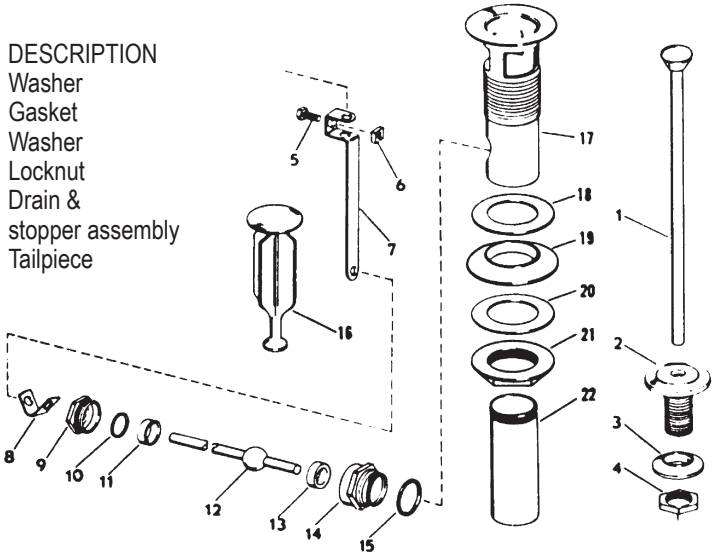

TOTAL MAINTENANCE SOLUTIONS

HOUSTON 800/392-5066

ORLANDO 800/327-3022

GREENVILLE 800/476-2212

LOOK FOR US ON THE WEB AT: www.TMSSouth.com

KOHLER TRITON WIDE SPREAD K-7474

ITEM	PART #	DESCRIPTION
1	40140372	Chrome plug button
2	40140374	Button cap – red
	40140373	Button cap – blue
3	09896252	Screw
4	09896254	Screw
5	09896256	Screw, round head
6	50100009	Screw
7	52640	4 - Arm handle and bonnet
8	52637	Lever handle, large bonnet assy.
9	52926	Wrist handle w/bonnet
10	09896258	Handle and bonnet assy.
11	09896260	Escutcheon
12	09891970	Gasket
13	40140159	Spline adapter (not for wrist handle)
14	09896262	Stabilizer kit (2 ea)
15	40140003	Ceramic stem (clockwise close)
	40170016	Ceramic stem (counterclockwise close)
16	40409	Valve body S/A – hot
	40478	Valve body S/A – cold
17	09891784	Nut
18	40001	Washer
19	40005	Nut
20	40950064	O-ring
21	40140131	Stopper w/o-ring
27	40140148	Gasket
28	09892489	Trip lever housing
29	09892490	Washer
30	40140149	Ball trip lever
31	09892500	Washer
32	38743	Nut
33	09890190	Clip spring
34	09893670	Link
35	09890230	Screw
36	40098	Supply tee
37	40140096	Washer
38	40140097	Gasket
39	40014	Nut
40	40015	Washer
41	09893680	Lift rod assy.
42	73149-CP	Spout
43-44	40110166	VP aerator w/wrench
45	40140153	Nut
46	09896268	Hose 1/4-18 x 16 1/2”

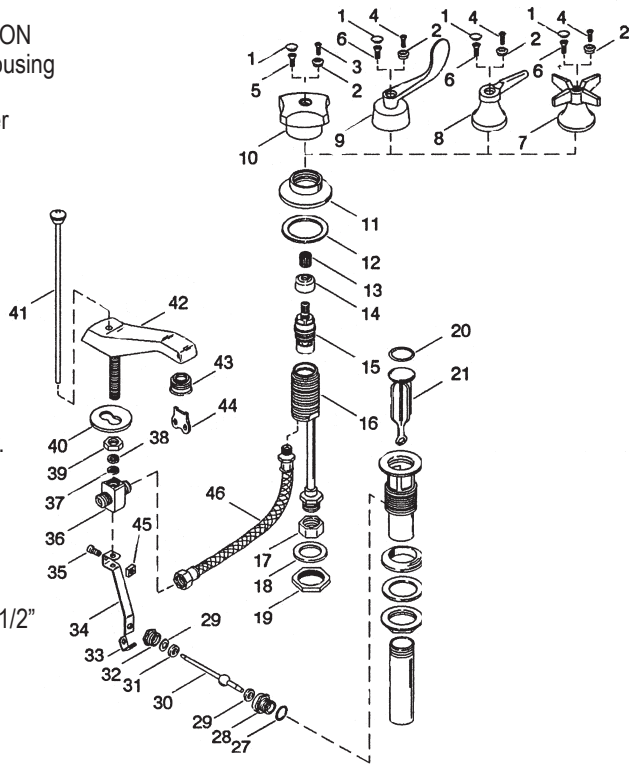

KOHLER TRITON LAVATORY FAUCET K-7400 SERIES

ITEM	PART #	DESCRIPTION
1	40140372	Chrome plug button
2	40140374	Button cap – red
	40140373	Button cap – blue
3	09896252	Screw
4	09896254	Screw 8-32 X 3/4
5	09896202	Screw
6	50100009	Screw
7	50100009	Screw
8		Wrist handle & bonnet
9		Lever handle – small bonnet assy.
10		4 - arm handle & bonnet assy.
11	09896270	Chrome handle & bonnet assy.
12	09896262	Stabilizer kit (2 ea)
13	40140159	Spline adapter (not for wrist handle)
14	40140003	Ceramic valve (clockwise close – hot)
	40170016	Ceramic valve (counter clockwise close – cold)
15-16		VP aerator w/ wrench
17	09890230	Screw
18	40140153	Nut
19	09893670	Link
20	09890190	Clip spring
21		Nut
22	09892500	Washer
23	09892490	Washer
24	40140149	Ball lever
25	09892489	Trip lever housing
26	40140148	Gasket
27-28	40140131	Stopper w/ o-ring
28	40950064	O-ring
37	09893680	Connecting rod

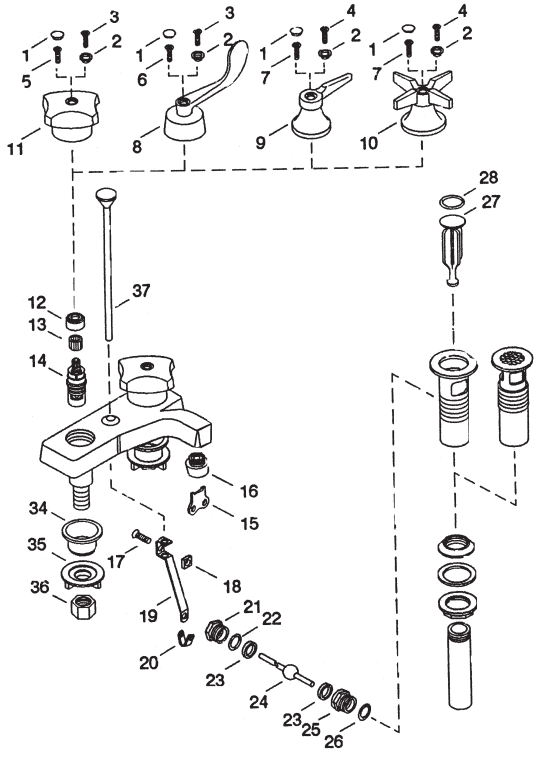

TOTAL MAINTENANCE SOLUTIONS

HOUSTON 800/392-5066

ORLANDO 800/327-3022

GREENVILLE 800/476-2212

LOOK FOR US ON THE WEB AT: www.TMSSouth.com

FAUCET REPAIR

KOHLER K-7512 ARGYLE FAUCET (CROSS HANDLE) K-7513 WITH LEVER HANDLE

ITEM	PART #	DESCRIPTION
1	40700508	Handle screw
2	40140467	Handle – cold
	40140468	Handle – hot
	40140123	Lever handle – cold
	40140124	Lever handle – hot
3	09891762	Bonnet nut
4	40950048	O-Ring
5	09892550	Washer
6	09892508	Washer
7	43401012	Stem w/washer & screw
	43401012	Hot stem for lever handle
	43401011	Cold stem for lever handle
8	40110118	Seat washer
9	50100009	Screw
10	42000580	Renewable seat
11		Body
12	40800529	Washer
13	40800598	Brass locknut
14	40800454	Coupling nut

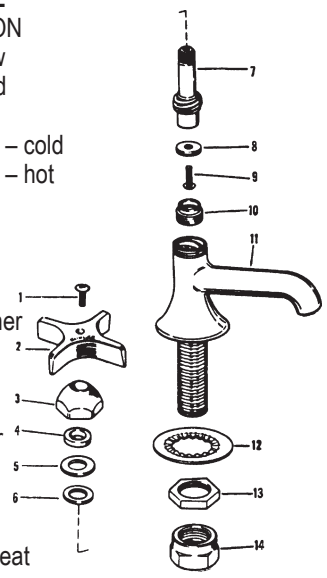

KOHLER K-7510 SENTINEL FAUCET

ITEM	PART #	DESCRIPTION
1	40700508	Handle screw
2	40140467	Cold handle
	40140468	Hot handle
3	09892160	Bonnet nut
4	40950037	O-Ring
5	40950023	O-Ring
6	40140031	Washer
7	40140150	Stem
8	40140105	Plunger w/washer & screw
9	40110118	Seat washer
10	40140321	Screw
11	40150081	Sleeve
12	40140173	Renewable seat
13		Body
14	40800529	Washer
15	40800598	Brass locknut
16	40800454	Coupling nut

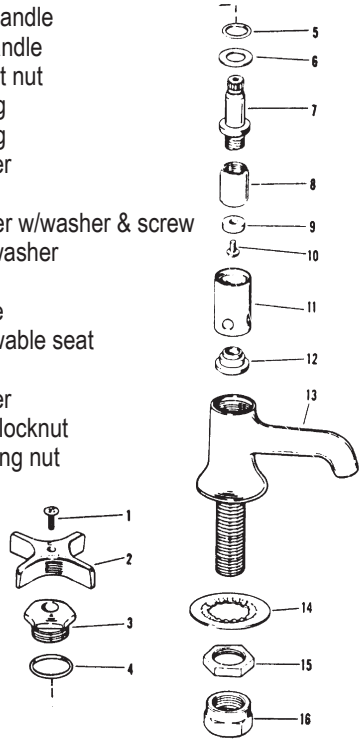

KOHLER SENTRY SELF-CLOSING FAUCET

ITEM	PART #	DESCRIPTION
1	09894800	Index cap – cold
	09894801	Index cap – hot
2	40700517	Lock washer
3	40700516	Adjustable nut
4	40700515	Washer
5	40700514	Handle
6	40700513	Ball & frame assembly
7	09894810	Bonnet
8	40950037	O-Ring
9	41001001	O-Ring
10	40700528	Washer
11	40700509	Spring
12	09894812	Stem w/ washer & screw
13	40110118	Seat washer
14	50100009	Screw
15	40700530	Sleeve
16	40140173	Renewable seat
17		Body
18	09891835	Washer
19	40140042	Locknut
20	09891784	Coupling nut

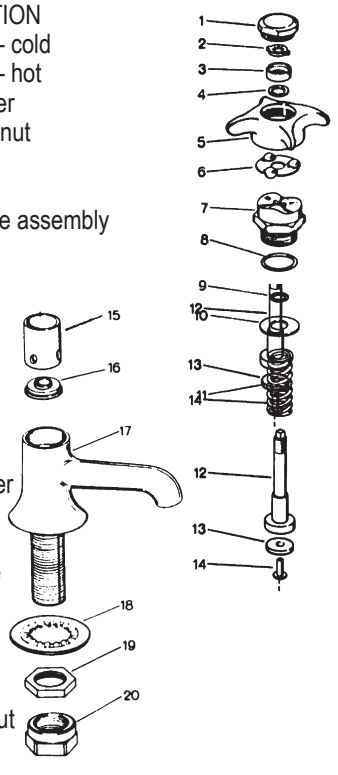

KOHLER K-7504 SIGNAL PUSH-BUTTON SELF-CLOSING FAUCET

ITEM	PART #	DESCRIPTION
1	09894820	Screw
2	09894822	Push button – plain
3	09894826	Lock ring
4	09894828	Sleeve
5	09894824	Spring
7	40950037	O-Ring
8	40950049	O-Ring
9	09891960	Seat washer
10	40950019	O-Ring
11	09894836	Lock washer
12	09894838	Cup washer
13	09894840	Washer
14	09894842	Pin
15	09894844	Coupling nut
16	09894846	Dash pot
17	09894848	Washer
18	09894850	Screen
19	09894852	Screen retainer
6-19	40140063	Valve rebuild kit
20	09894832	Barrel
21	09894834	Stem & seat
22		Body
23	09891835	Washer
24	40140042	Lock nut
25	09891784	Coupling nut

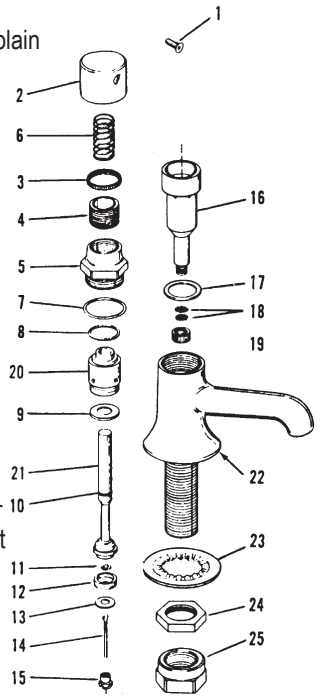

TOTAL MAINTENANCE SOLUTIONS

HOUSTON 800/392-5066
ORLANDO 800/327-3022
GREENVILLE 800/476-2212

LOOK FOR US ON THE WEB AT: www.TMSSouth.com

KOHLER HOSPITAL LAVATORY FITTINGS K-13341, K-13343, K-13388, K-13375

ITEM	PART #	DESCRIPTION
1	40700508	Handle screw
2	09892680	4" Wrist handle – cold
	09892690	4" Wrist handle – hot
3	09892140	Escutcheon
4	09892270	Washer
5	40140007	Bonnet
6	40950038	O-Ring
7	40950023	O-Ring
8	40140031	Washer
9	40110118	Seat washer
10	40140321	Screw
11	40140173	Renewable seat
12	40140150	Stem – hot
	40140158	Stem – cold
13	40140322	Plunger – cold
	40140108	Plunger – hot
14	40150081	Sleeve
7-14	40140034	Stem assy.- cold
	40140035	Stem assy.- hot
15	09891670	Washer
16	09891955	Locknut
17		Valve body
18	09891784	Coupling nut
19	09891784	Coupling nut
20	09890330	Friction washer
21	09890320	Slip joint washer
22	09891840	Washer
23	09891840	Washer
24	09891841	Locknut
25	40140056	Gasket
26	40140157	Packing
27	09892120	Friction ring
28	09892150	Locknut
29	09892271	Spout
30	09891956	Adapter
31	09892350	Aerator
32	09893680	Lift rod
33		Spout body
34		Lift rod sleeve
35		Cross connection
36	40140056	Gasket
37		Cross connection
38	40140056	Gasket
39	09892296	Clamping nut

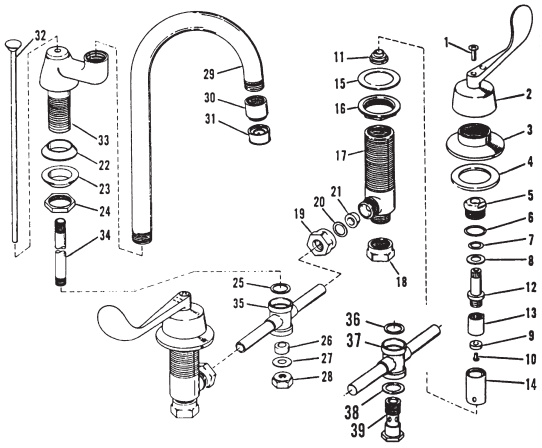

KOHLER LAVATORY GOOSENECK SPOUTS

ITEM	PART #	DESCRIPTION
1	09891784	Coupling nut
2	40140042	Locknut
3	09892130	Sleeve
4	09891840	Washer
5	09892204	Shank
6	09892274	Spout (note 1)
7	09891956	Adapter
8	09892350	Aerator
9-12	09891258	Spray assembly
10-12	09891574	Spray face
13	09891962	Spout (note 2)

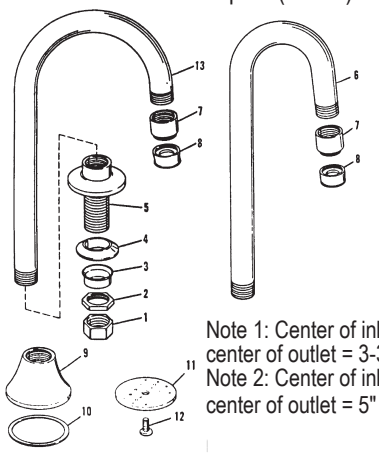

Note 1: Center of inlet to center of outlet = 3-34"
Note 2: Center of inlet to center of outlet = 5"

KOHLER K-13358 HOSPITAL LAVATORY FITTING

ITEM	PART #	DESCRIPTION
1	40700508	Handle screw
2	09892670	4" Wrist handle – hot
	09892660	4" Wrist handle – cold
3	40140008	Bonnet
4	40950038	O-Ring
5	40950023	O-Ring
6	40140031	Washer
7	40110118	Seat washer
8	40140321	Screw
9	40140173	Renewable seat
10	40140158	Stem – hot
	40140150	Stem – cold
11	40140322	Plunger – cold
	40140108	Plunger – hot
12	40150081	Sleeve
5-12	40140034	Stem assy.- cold
	40140035	Stem assy.- hot
13	45972008	Aerator
14	09892170	Adapter
15	09892634	Spout
16	09892206	Adapter
17-20	09891568	Spout attachment kit
21		Body
22	09892100	Spacer
23	40140042	Locknut
24	40800454	Coupling nut

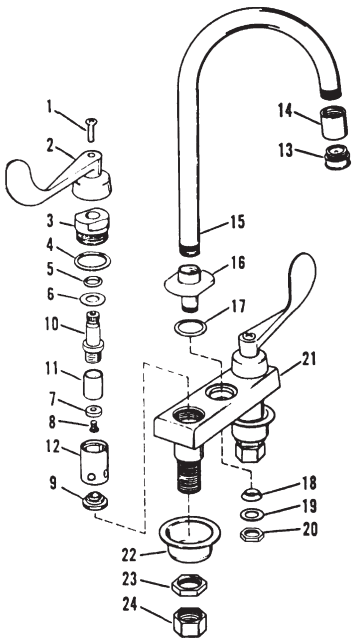

KOHLER WRIST HANDLES

ITEM	PART #	DESCRIPTION
1	09892646	4" wrist handle – cold
	09892647	4" wrist handle – hot
	09892648	6" wrist handle – cold
	09892649	6" wrist handle – hot
2	09892660	4" wrist handle w/ cover – cold
	09892670	4" wrist handle w/ cover – hot
	09892672	6" wrist handle w/ cover – cold
	09892674	6" wrist handle w/ cover – hot
3	09892680	4" wrist handle w/ cover – cold
	09892690	4" wrist handle w/ cover – hot
	09892692	6" wrist handle w/ cover – cold
	09892694	6" wrist handle w/ cover – hot
4	40140155	Plug button – Hot
	40140156	Plug button – Cold
5	09891567	Handle screws (2)
6	09891602	Handle kit – pair H & C
7	09891604	Handle kit – pair H & C
8	09891606	Escutcheons (2) – large Finesse handles
9	09891608	Escutcheons (2) – wrist handle w/ large skirt
10	40700508	Handle screw

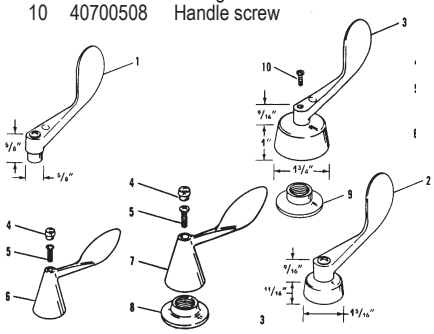

TOTAL MAINTENANCE SOLUTIONS

HOUSTON 800/392-5066
ORLANDO 800/327-3022
GREENVILLE 800/476-2212

LOOK FOR US ON THE WEB AT: www.TMSSouth.com

FAUCET REPAIR

KOHLER FLOOR MOUNTED PEDAL VALVE

ITEM	PART #	DESCRIPTION	ITEM	PART #	DESCRIPTION
1	09894674	Screw	29	40140291	Seat washer
2	09894673	CP cover	30	09894653	Stem
3	09894686	Cold pedal	31	09894664	Screw
4	09894665	Pin	32		Body
5	09894667	Spring	33	09891784	Coupling nut
6	09894668	Ball	34	09894675	Tailpiece
7	09894662	Screw	35		Body
8	09894648	Nut	36	09894680	Stem
9	09894654	Washer	37	09891782	Washer
10	09894666	Screw	38	40950048	O-Ring
11	09894659	Lever	39	09892038	Packing nut
12	09894688	Hot pedal	40	09891722	Key
13	09894665	Pin	41		Base
14	09894667	Spring	42	09894671	Screw
15	09894668	Ball			
16	09894662	Screw			
17	09894648	Nut			
18	09894666	Screw			
19	09894659	Lever			
20	09894654	Washer			
21	40140046	Cotter pin			
22	09894661	Shaft			
23	09894652	Push button			
24	09894657	Spring			
25	09894656	Washer			
26	41001001	O-Ring			
27	09894650	Sleeve			
28	40950029	O-Ring			

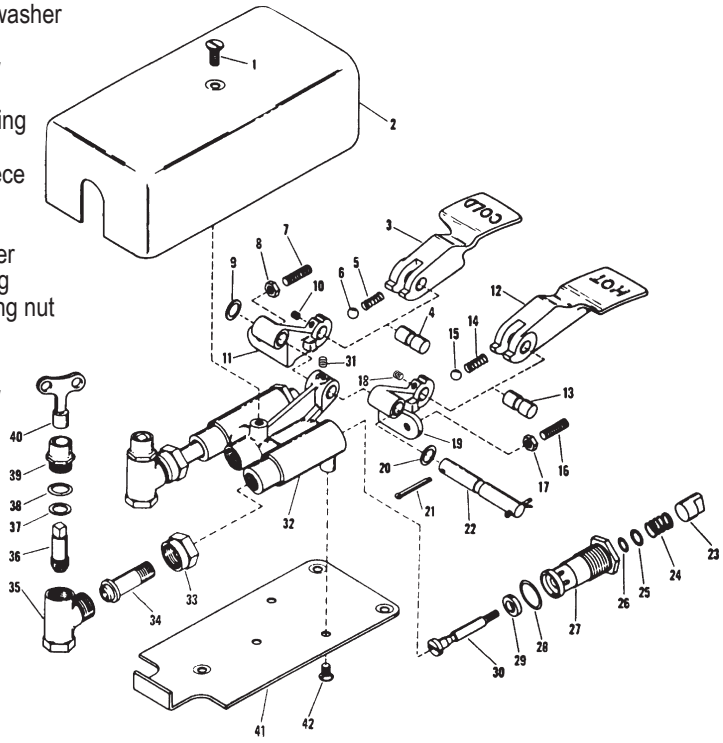

KOHLER FOOT CONTROL MIXING VALVE

ITEM	PART #	DESCRIPTION	ITEM	PART #	DESCRIPTION
1	09894674	Screw	29	40140291	Seat washer
2	09894673	CP cover	30	09894653	Stem
3	09894669	Cold pedal	31	09894664	Screw
4	09894665	Pin	32		Body
5	09894667	Spring	33	09891784	Coupling nut
6	09894668	Ball	34	09894675	Tailpiece
7	09894662	Screw	35		Body
8	09894648	Nut	36	09894680	Stem
9	09894654	Washer	37	09891782	Washer
10	09894666	Screw	38	40950048	O-Ring
11	09894659	Lever	39	09892038	Packing nut
12	09894670	Hot pedal	40	09891722	Key
13	09894665	Pin	35-40	09894682	Stop assy.
14	09894667	Spring	41	09894671	Screw
15	09894668	Ball	42		Body
16	09894662	Screw	43	09892038	Packing nut
17	09894648	Nut	44	40950048	O-Ring
18	09894666	Screw	45	09891782	Washer
19	09894660	Lever	46	09894680	Stem
20	09894654	Washer	47		Body
21	09894661	Shaft	48		Sleeve
22	40140046	Cotter pin	49		Nut
23	09894652	Push button	43-49	09894684	Stop assy.
24	09894657	Spring	50		CP flange
25	09894656	Washer	51		Supply tube
26	41001001	O-Ring			
27	09894650	Sleeve			
28	40950029	O-Ring			

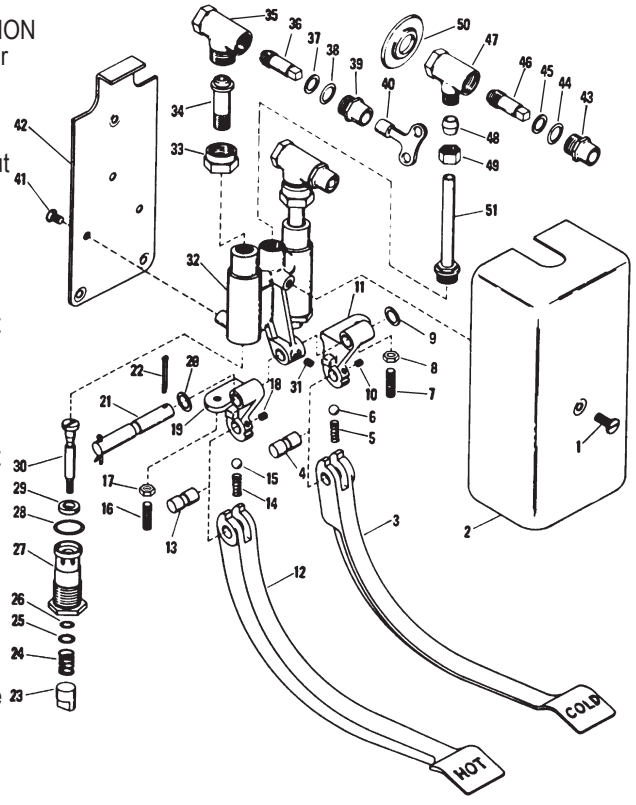

TOTAL MAINTENANCE SOLUTIONS

HOUSTON 800/392-5066
ORLANDO 800/327-3022
GREENVILLE 800/476-2212

LOOK FOR US ON THE WEB AT: www.TMSSouth.com

KOHLER K-13931-T BUILT-IN BEDPAN WASHER

ITEM	PART #	DESCRIPTION
1	09893008	Screw
2	09892264	Spray face
3	40950076	O-Ring
4	09891594	Spray body
5		Nipple
6		Body
7	09892308	Pin
8	09892306	Handle
9	09892313	Bonnet
10	40950022	O-Ring
11	09892042	Washer
12	40700535	Gasket
13	40700509	Spring
14	09892307	Stem assy.
15	40110162	Seat washer
16	50100009	Screw
17	40140113	Renewable seat
6-17	09890116	Self-closing valve S/A
18	09891226	Bushing
19	09891227	Hose
20	09891224	Hose connection
21		Screw
22		Clamp
23		Nipple
24		Ell
26	09890776	Vacuum breaker
27		Nipple
28		Elbow
29		Ground joint CP
30	40140341	Union nut CP
31		Set screw
32		Flange
33		Nipple
34	09893930	Handle screw
35	09893037	Handle

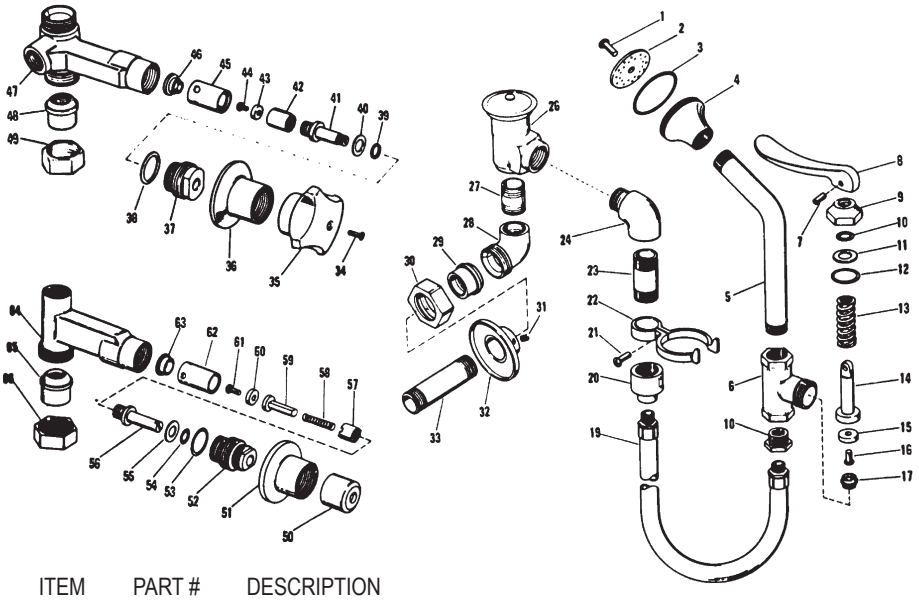

ITEM	PART #	DESCRIPTION
36	40140167	Escutcheon
37	40140009	Bonnet
38	40950037	O-Ring
39	40950023	O-Ring
40	40140031	Washer
41	40140150	Stem
42	40140105	Plunger
43	40110118	Seat washer
44	40140321	Screw
45	40150081	Sleeve
46	40140173	Renewable seat
39-46	40140034	Stem assembly
47		Valve body
48	40140342	Union for 1/2" IP

ITEM	PART #	DESCRIPTION
49	40140341	Union nut
50	09891106	Shield
51	40140167	Escutcheon
52	09891108	Bonnet
53	40950037	O-Ring
54	40950023	O-Ring
55	40140031	Washer
56	09891107	Stem
57	09891109	Plunger
58-63	09891561	Valve rebuild kit
64		Valve body
65	40140342	Union
66	40140341	Union nut

KOHLER K-13925 EXPOSED BEDPAN WASHER ITEMS 1 THRU 26 SAME AS K-13931-T

ITEM	PART #	DESCRIPTION
27-30	09891316	Support assembly
31		Nipple
32		Body
33	09891722	Key
34	09892038	Packing nut
35	40950048	O-Ring
36	09891782	Washer
37	09892275	Valve stem
38		Nipple
39	40700508	Screw
40	09890166	Handle
41	09892160	Bonnet
42	40950037	O-Ring
43	40950023	O-Ring
44	40140031	Washer
45	40140150	Stem
46	40140105	Plunger
47	40110118	Seat washer
48	40140321	Screw
49	40150081	Sleeve
50	40140173	Renewable seat
43-50	40140034	Stem assembly
51		Body
52		Flange
53		Set screw
54		Nipple

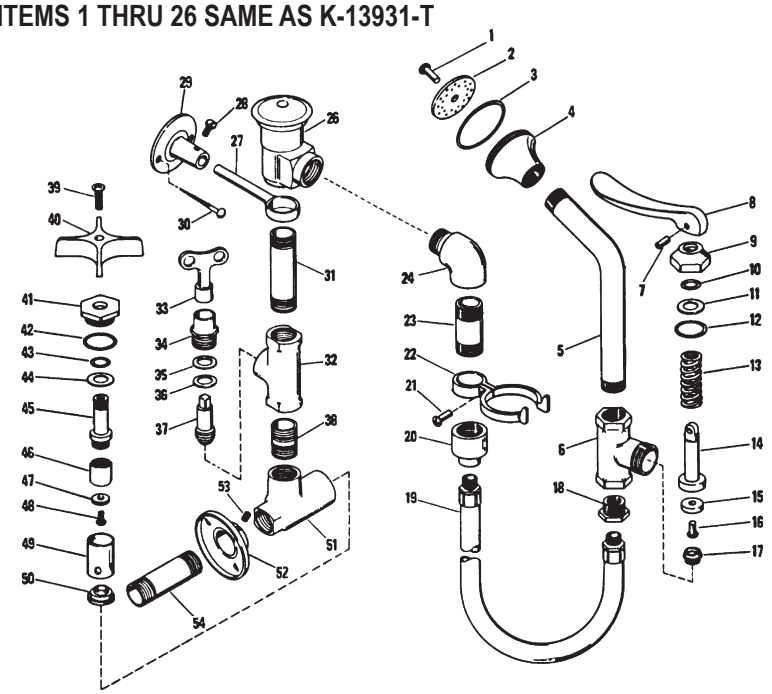

TOTAL MAINTENANCE SOLUTIONS
HOUSTON 800/392-5066
ORLANDO 800/327-3022
GREENVILLE 800/476-2212
LOOK FOR US ON THE WEB AT: www.TMSSouth.com