FLUSH VALVES

OPTIMA PLUS BY SLOAN

ITEM	PART #	DESCRIPTION
1	40268849	Locking ring
2A	40268850	Plastic cover (urinal)
2B	NLA	Plastic cover w/ override button
2C	40268851	Metal cover (urinal)
2D	40258852	Metal cover w/ override button
3	40260324	Cover gasket
4	40261133	Electronic module, 1.6 GPF and 3.5 GPF
4	40265177	Electronic module, 1.0 GPF and 1.5 GPF
5	40260016	Inside cover w/ solenoid
6*	40265001	Closet inside parts kit, 1.6 GPF and 3.5 GPF
6*	40265000	Urinal inside parts kit, 1.0 GPF and 1.5 GPF
7	40260005	Quad ring
8		Diaphragm
9	40268853	Metal handle cap
10	91788032	Decorative handle cap
11		Vacuum breaker repair kit
12		Vacuum breaker
13		Spud coupling
14	40268854	CP stop coupling
15		CP adjustable tailpiece
16	40950069	O-ring
17		Bak-Chek stop – complete
18		Control stop repair kit
19		CP Bonnet
20	40268855	Vandal resistant control stop cap assembly
21	40268856	Decorative stop cap
22	40268857	Optional beam deflector
23		Screwdriver
24	40268859	Strap wrench

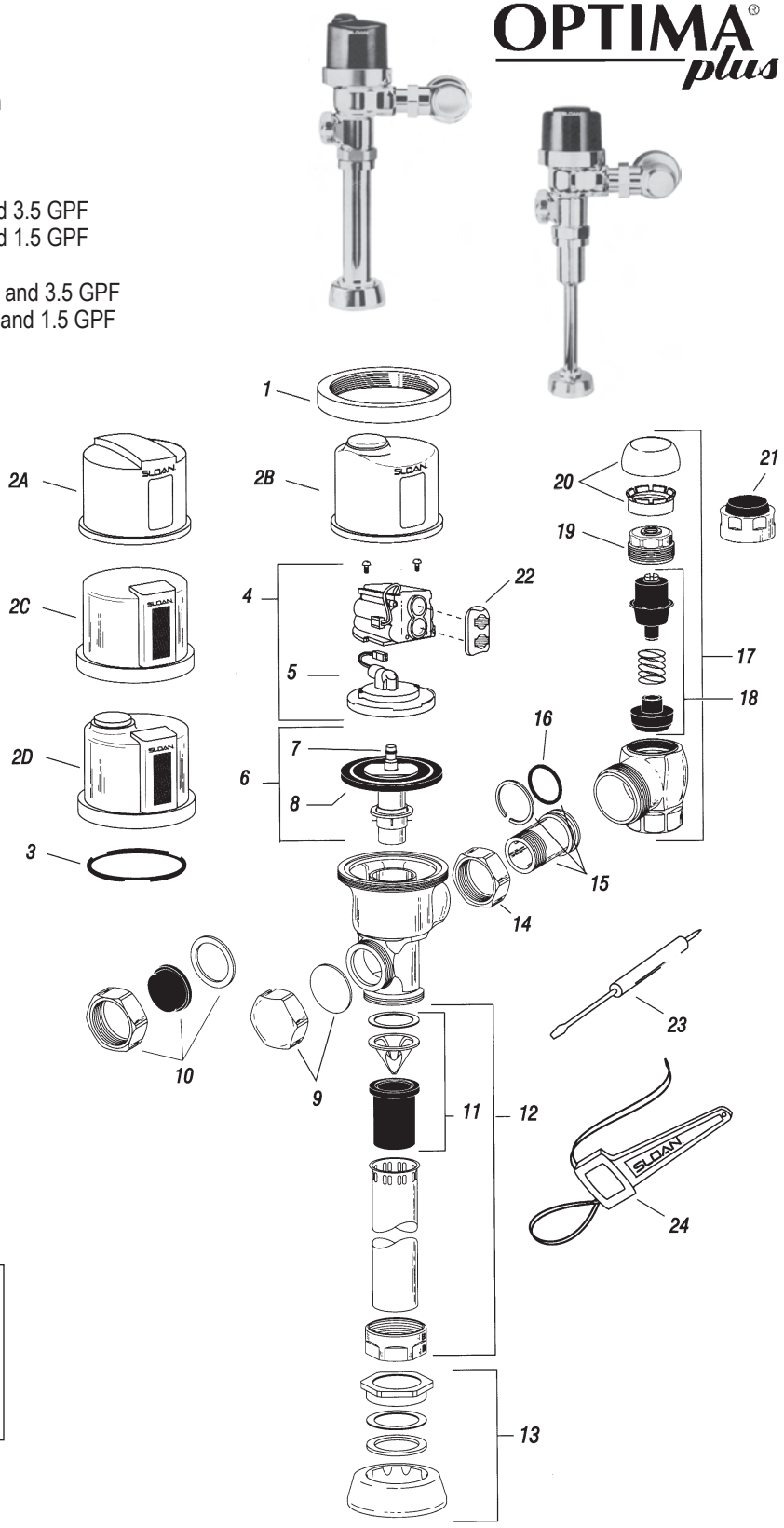

A For Sloan Stop Repair Parts and Kits
See Manually Operated Valves

B For Sloan Vacuum Breaker Repair Parts and Kits
See Manually Operated Valves

* Replaced by new Flex Tube Diaphragm inside parts kit

**Batteries:
When replacement batteries are required use 4 AA alkaline batteries, PART # 64741006

FOR MORE INFORMATION ON INSTALLING AND MAINTAINING *SLOAN OPTIMA FLUSH VALVES* CONTACT YOUR IMSCO REPRESENTATIVE.

SLOAN OPTIMA G2 PLUS SENSOR MODULE COMPONENT PARTS

ITEM	PART #	DESCRIPTION
2	91785168	Cover assembly
3	40268861	Override button assembly (includes screws & hex wrench)
4	40268862	Eye cover plate (EBY-131)
5	40268849	Locking ring
	40265524	Locking ring for Zurn valves
6	40261290	G2 electronic module – water closet
	40265451	G2 electronic module – urinal
9	40261360	Isolated solenoid (for G2 modules only)
10		Flex tube diaphragm kit
11		Hex wrench
12		Regulator (specify color)

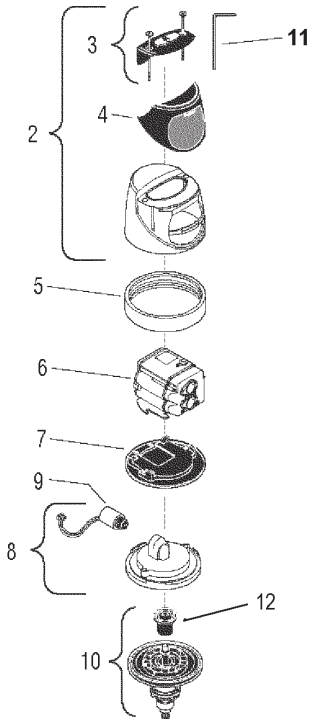

HANDS FREE RETRO KIT

COLOR	PART #	DESCRIPTION
	40261023	Urinal – .5 GPF
Green	40265000*	Urinal – 1.0 GPF
Black	40265000*	Urinal – 1.5 GPF
White	40255001†	Urinal – 3.5 GPF
Green	40265001†	Closet – 1.6 GPF
	40265014	Closet – 2.4 GPF
White	40265001†	Closet – 3.5 GPF

Part numbers marked * or † include parts for each size.

OLD STYLE
Replace with above

SLOAN GEM 2

ITEM	PART #	DESCRIPTION
1		CP cover
2	91787139	Slip disc
3	91787193	Piston kit – 3.5 GPF water closet
	91787195	Piston kit – 1.6 GPF water closet
	91787192	Piston kit – 1.5 GPF urinal
	91787185	Piston kit – 1.0 GPF urinal
4	91787070	Handle assembly
5	91787074	Handle repair kit
6		Handle gasket
7	40262297	Handle seal
8		Handle grip
9		Handle socket
10	40201005	Vacuum breaker
11		Vacuum breaker repair kit
12		Spud coupling
13	40268676	Stop coupling
14	40268801	Adjustable tailpiece
15	40950069	O-ring
	91787128	GEM 2 repair kit (includes 2, 6, 7, B, C, E, G & H)
	40261077	Piston kit – closet
	40261072	Piston kit – urinal

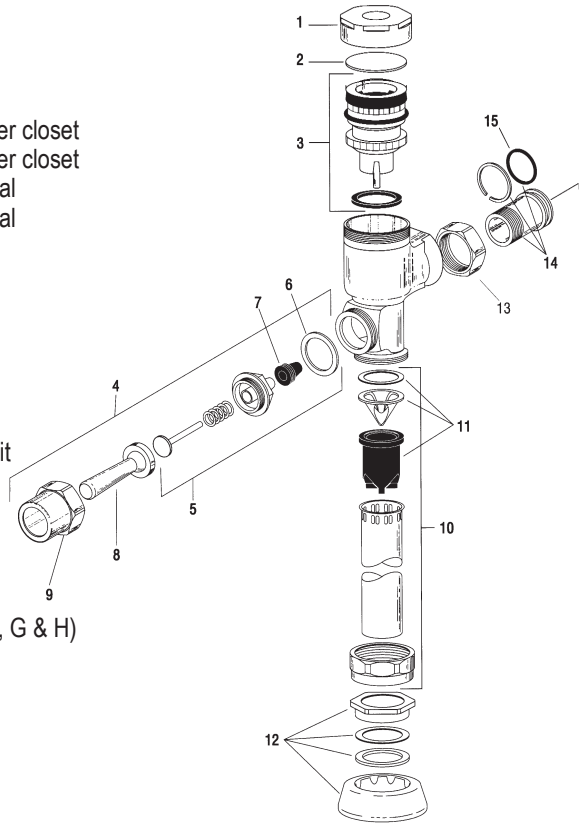

Piston Kit

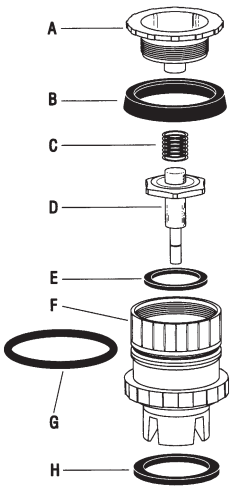

FLUSH VALVES

SLOAN ROYAL (DIAPHRAGM TYPE) FLUSH VALVE

SLOAN®

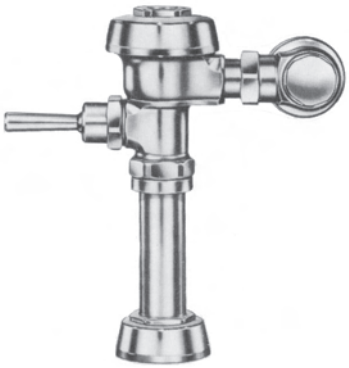

ITEM	PART #	DESCRIPTION
1	40261172	CP Cover – Royal
2	40261124	Inside cover
3		Dual filtered diaphragm assembly (see inset)
4	40262002	ADA compliant triple seal handle assembly
5	40261082	CP Handle coupling
6	40262109	CP socket assembly
7	40262274	CP ADA compliant handle
8	40261011	Triple seal handle repair kit
9	40261139	Handle gasket
10	40266125	Spud coupling assembly, 3/4"
	40266140	Spud coupling assembly, 1-1/4"
	40266146	Spud coupling assembly, 1-1/2"
11	40263183	High back pressure vacuum breaker repair kit
12		See page 11-24 for complete listing of sizes
13	40268676	CP stop coupling
14	40268801	CP Adjustable Tailpiece 2-1/16" standard length
15	40268381	Locking ring
16		1" CP Bak Chek Screwdriver Stop
		3/4" CP Bak Chek Screwdriver Stop
17	SEE	Control stop repair kit (1" and 3/4" H-700-A and 1" H-600-A Bak Chek screwdriver control stop)
	PAGES	Control stop repair kit (3/4" H-600-A Bak Chek screwdriver control stop)
18	11-25 &	CP Bonnet (1" and 3/4" H-700-A and 1" H-600-A Bak Chek screwdriver control stop)
	11-26	CP Bonnet (3/4" H-600-A Bak Chek screwdriver control stop)
19	FOR	Vandal resistant control stop cap assembly (1" and 3/4" H-700-A and 1" H-600-A Bak Chek screwdriver control stop)
	STOPS	Vandal resistant control stop cap assembly (3/4" H-600-A Bak Chek screwdriver control stop)
20		Control stop cap CP (1" and 3/4" H-700-A and 1" H-600-A Bak Chek screwdriver control stop)
		Control stop cap CP (3/4" H-600-A Bak Chek screwdriver control stop)
21		Control stop cap with bumper (1" and 3/4" H-700-A and 1" H-600-A Bak Chek screwdriver control stop)
22		Control stop cap with extended bumper (3/4" H-600-A Bak Chek screwdriver control stop)
23	40950069	O-ring

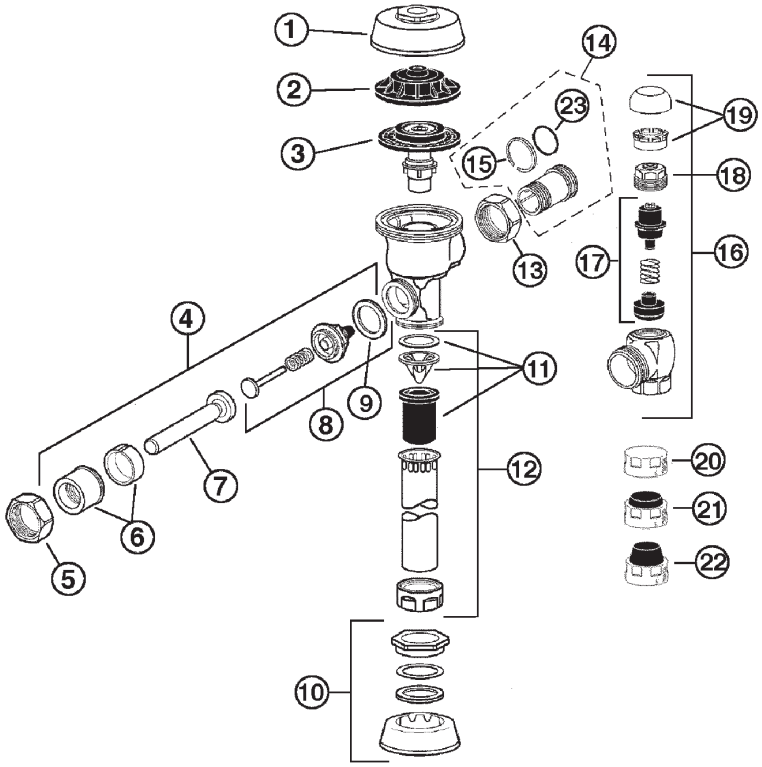

SLOAN ROYAL PERFORMANCE REPAIR PARTS

HIGH BACK PRESSURE VACUUM BREAKER REPAIR KIT
PART # 40263183

FIXED DUAL FILTERED DIAPHRAGM ASSEMBLY

.5 gpf	PART # 91781095
1.0 gpf	PART # 40261123
1.5 gpf	PART # 40261120
1.6 gpf	PART # 40261122
3.5 gpf	PART # 40261121

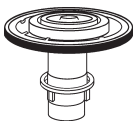

TRIPLE SEAL HANDLE REPAIR KIT
PART # 40261011

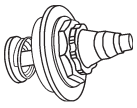

SLOAN ROYAL PERFORMANCE KIT
(includes individual repair kits and tailpiece o-ring)

3.5 gpf	PART # 40260018
1.5 gpf	PART # 40262027

TMS TOTAL MAINTENANCE SOLUTIONS
HOUSTON 800/392-5066
ORLANDO 800/327-3022
GREENVILLE 800/476-2212
LOOK FOR US ON THE WEB AT: www.TMSSouth.com

SLOAN REGAL (DIAPHRAGM TYPE) FLUSH VALVE

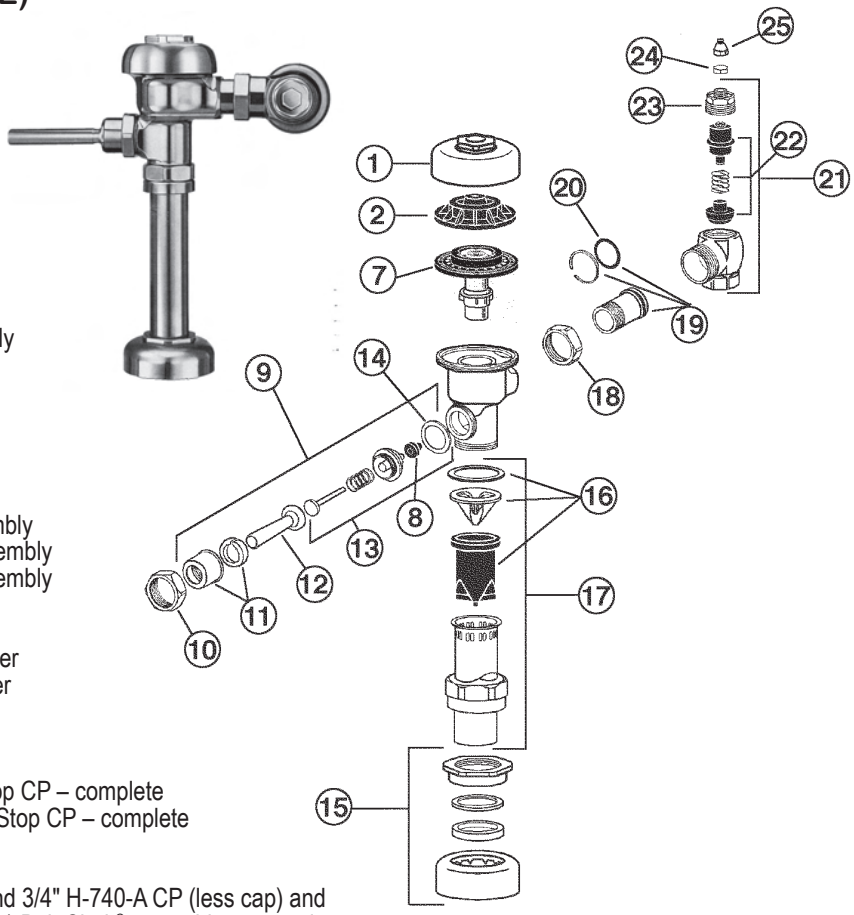

ITEM	PART #	DESCRIPTION
1	40260321	CP cover
2	40261124	Inside cover
3		Relief valve (see inset)
4		Disc (see inset)
5		Diaphragm (see inset)
6		Guide assembly (see inset)
7		Inside parts kit
8		Seal
9	40262279	CP handle assembly
	40262002	CP handicap handle assembly
10	40261082	CP handle coupling
11	40262109	CP socket assembly
12	40262274	CP handle grip
		CP handicap handle grip
13	40262305	Handle repair kit
14	40261139	Handle gasket
15	40266125	3/4" CP spud coupling assembly
	40266140	1-1/4" CP spud coupling assembly
	40266146	1-1/2" CP spud coupling assembly
16	40261005	Vacuum breaker repair kit
17	40263005	3/4" x 9" CP vacuum breaker
	40263006	1-1/4" x 9" CP vacuum breaker
	40261040	1-1/2" x 9 CP vacuum breaker
18	40268676	CP stop coupling
19	40268801	CP adjustable tailpiece
20	40950069	O-ring
21	40268029	1" Screwdrive Bak Chek® Stop CP – complete
	40268031	3/4" Screwdriver Bak Chek® Stop CP – complete
22	40201009	1" Control stop repair kit
	40261085	3/4" Control stop repair kit
23		CP bonnet (for use with 1" and 3/4" H-740-A CP (less cap) and 1" H-540-a CP (with H-37 cap) Bak Chek® screwdriver control stops CP bonnet (for use with 3/4" H-740-A CP Bak Chek® screwdriver control stops
24	40268156	CP cap
25	91783635	Bumper assembly

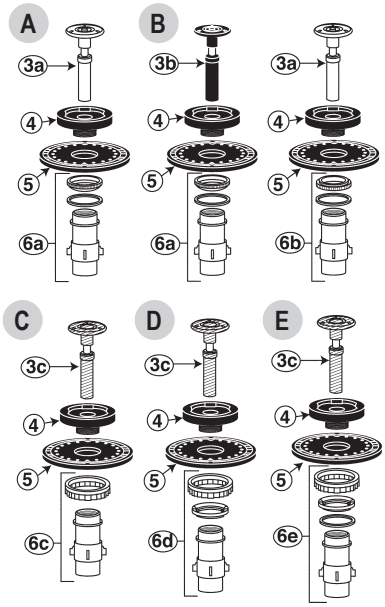

INSIDE PARTS KITS

(Item #7 above)

ITEM	PART #	DESCRIPTION
A	40260004	4.5 gpf, closet
B	40261037	1.5 gpf, urinal
C	40261038	3.5 gpf, closet
D	40261041	1.6 gpf, closet
E	40261044	1.0 gpf, closet

INSIDE PARTS COMPONENTS

ITEM	PART #	DESCRIPTION
3a	40261129	Relief valve, white (closet)
3b	40260415	Relief valve, black (urinal)
3c	40261127	Relief valve, green (closet/urinal)
4	40260234	Disc
5	40261161	Diaphragm
6a	40201004	Guide assembly, 4.5 gpf
6b	40201004	Guide assembly, 3.5 gpf
6c	40268864	Guide assembly, 1.6 gpf
6d	40268865	Guide assembly, 1.0 gpf
6e	91781077	Guide assembly, 0.5 gpf

MASTER FLUSHOMETER REBUILD KITS ALSO AVAILABLE

FLUSH VALVES

SLOAN CROWN (PISTON TYPE) FLUSH VALVE

ITEM	PART #	DESCRIPTION
1	40268866	Urinal inside parts kit
2	40268866	Closet inside parts kit
3	40268867	Shower valve inside parts kit. (hot water)
4	40268868	CR-74-A CP cover assembly
5	40261163	S-60-AU Urinal piston assy
6	40260019	K-60-A Closet piston assy
7	40268869	S-60-AG Shower piston assy.
8	0301185	K-123-A Closet guide
9	40268871	S-43-A Urinal guide
10	40268872	S-43-A Shower guide
11	40268873	Crown/Naval closet washer set
12	40262297	Handle seal
13	40262279	Handle assembly
14	40261082	Handle coupling
15	40262109	CP Socket
16	40262274	CP Grip
17	40262305	Handle repair kit
18	40268874	3" CP Push button assembly
19	40268875	3" CP Push button replacement kit
20	40263396	3" CP Push button repair kit
21	40261125	3/4" CP Spud coupling assy.
	40261053	1" CP Spud coupling assy.
	40266140	1-1/4" CP Spud coupling assy.
	40266146	1-1/2" CP Spud coupling assy.
22	40268876	3/4" CP Outlet coupling assy.
	40268877	1" CP Outlet coupling assy.
	91787002	1-1/4" CP Outlet coupling
	40268879	1-1/2" CP Outlet coupling
23	40201005	Vacuum breaker repair kit
24	40268676	CP Stop coupling
25	91006012	CP adj. tlpc. 2-1/16" long
26	40268757	1" SD Bak-Chek CP control stop
	40268025	3/4"SD Bak-Chek CP control stop
27	40261003	CP Stop coupling GJ
28	40261004	CP Ground joint tlpc. 1-3/4" long
29	40261005	1" SD Bak-Chek CP stop GJ
30	40221125	Cowl nut
31	40261059	3/4" SJ washer
	40950107	1-1/4" SJ washer
	40950008	1-1/2" SJ washer

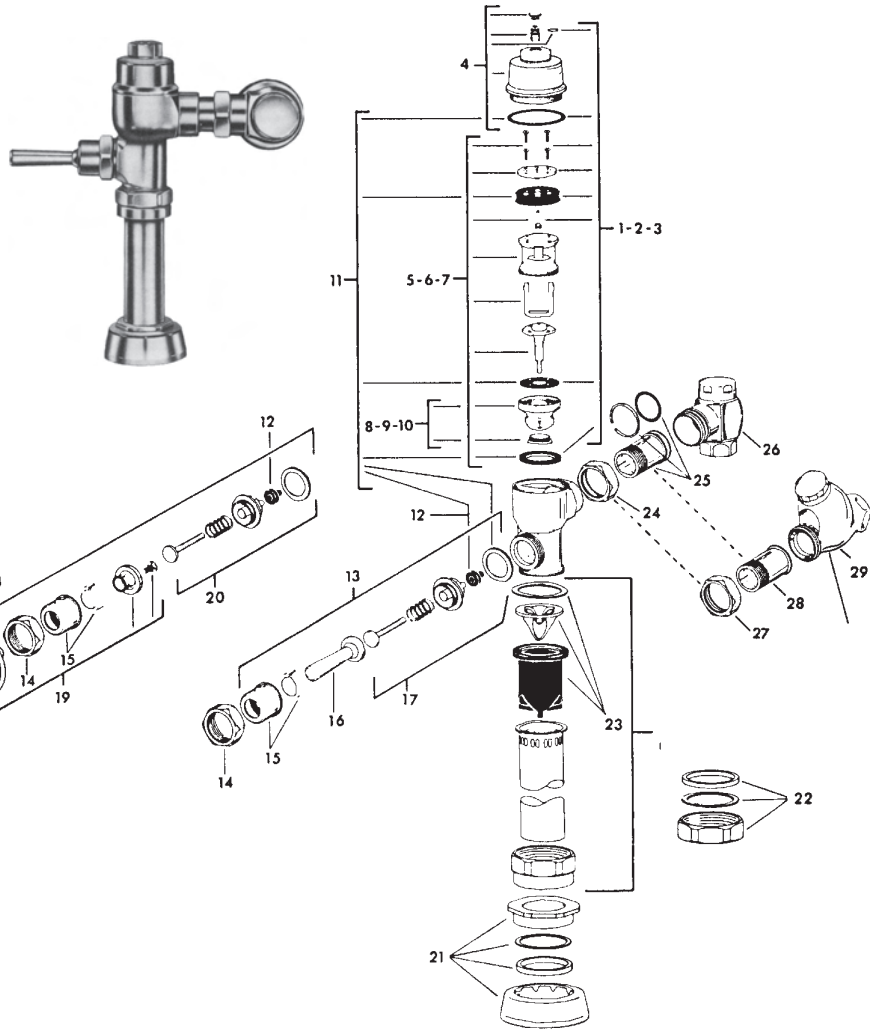

CROWN PISTON INSIDE PARTS

ITEM	PART #	DESCRIPTION
1	40268880	Cover button
2	40268881	Crown regulating screw
3		CR-70 O-ring
4		CR-74 Cover
5	40268882	Cover gasket
6	40268883	Top plate screws
7	40268884	Crown top plate
8	40268885	Crown molded cup
11	91782016	Xpelor
12	40268886	CR-60 piston body
14	40268887	Safety bar
15	40268888	Crown relief valve
16	40268889	Relief valve seat
17		Closet /Urinal guide
18		Restriction ring
19	40268890	Closet Main seat
	40268891	Urinal Main seat

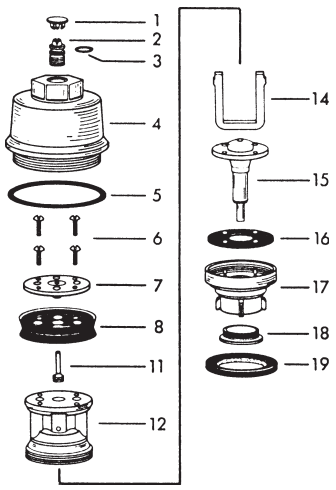

TOTAL MAINTENANCE SOLUTIONS
HOUSTON 800/392-5066
ORLANDO 800/327-3022
GREENVILLE 800/476-2212
LOOK FOR US ON THE WEB AT: www.TMSSouth.com

SLOAN SLIMLINE BEDPAN WASHER REPAIR PARTS

ITEM	PART #	DESCRIPTION
1	40268892	CP plug button
2	40268893	Retaining ring
3	91782360	Swivel & ball check assembly
4	40268894	Ground rubber ball
5	91782354	"O" ring
6	91782350	"O" ring
7	40268895	"O" ring
8	91782134	Diverter "O" ring (2 required)
9	40268896	Diverter valve seal washer
10	40268897	Diverter valve seal
11	40268879	1-1/2" S.J. coupling assembly
12	40268898	Set screw
13	40268899	Adjusting screw
14	40268900	Deoseptic unit nozzle pivot
15	40268901	Counter balance spring
16	40268902	CP deoseptic body
17		#10 wood screw
18	40268904	CP support rod
19	40268905	CP wall flange w/set screw
20	40268906	5/16" OD anchor
21	91782358	Outlet tube gasket
22	91782376	CP outlet tube
23	40800036	1-1/2" coupling outlet
24	91782326	"O" ring
25	91782374	Aspirator tube assembly
26	40268908	Deoseptic bottle
27	NLA	Nozzle & tube assembly - Order replacement kit 40261164
28	40268909	Nozzle screen
29	40268910	Nozzle spray disc
30	40268911	Spray disc retainer

REPAIR KITS

PART #	DESCRIPTION
40261118	"O" ring seal kit for BPW-1000 & 1010 (less deoseptic unit) Includes items 8, 9, 10, 12, 15 & 24
40268914	"O" ring seal kit for BPW-1005 & 1015 (with deoseptic unit) Includes items 2, 4, 5, 6, 7, 8, 9, 10, 12, 13, 15, 24, 25, 28 & 29
40261164	Repair kit for diverter valve used on BPW-1000,1005, 1010 & 1015 Includes items 12, 24, 27, 28, 29 & 30
91782380	Deoseptic conversion kit for BPW-1000 & 1010 Includes items 1 thru 10, 12 thru 14 & 24 thru 26

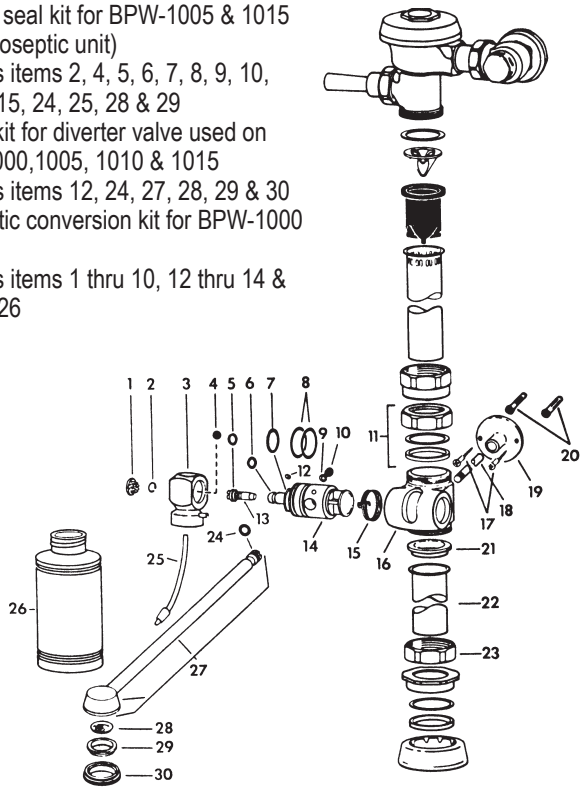

SLOAN DOLPHIN FLUSH VALVE REPAIR PARTS

ITEM	DESCRIPTION
1	NP cover nut
2	"O" ring
3	Retaining ring
4	Stem nut
5	Piston with o-ring
6	"O" ring
7	Piston spring
8	CP cover screw (4 required)
9	NP upper body
10	NP handle & socket
11	Regulating screw
12	RB stem
13	"O" ring (2 required)
14	RB bushing
15	Compression spring
16	RB insert
17-18	Flex-sac assembly
19-20	Seat assembly
21	NP lower body

REPAIR KITS

PART #	DESCRIPTION
40268912	Dolphin repair kit. Contains items 2, 6, 13, 17 & 18
40268913	Dolphin repair kit. Contains items 2, 6, 7, 13, 15, 17, 18, 19 & 20

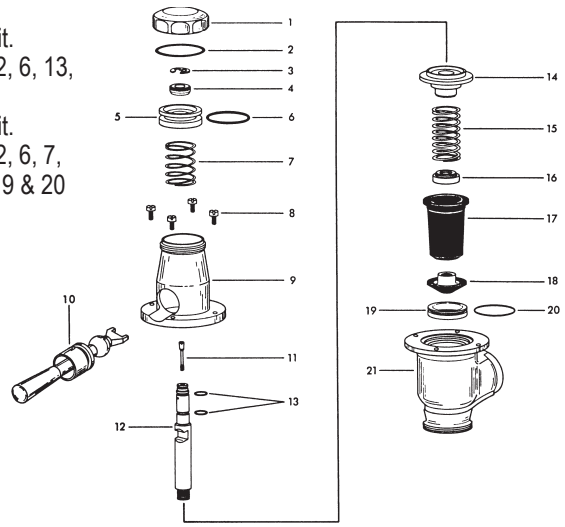

TOTAL MAINTENANCE SOLUTIONS

HOUSTON 800/392-5066

ORLANDO 800/327-3022

GREENVILLE 800/476-2212

LOOK FOR US ON THE WEB AT: www.TMSSouth.com

FLUSH VALVES

SLOAN HANDLE REPAIRS (EXPOSED)

NEW!

SLOAN HANDLE WITH SANIGUARD®
Antimicrobial protection from CHG
Part # 40261391

HANDLE FOR EXPOSED ROYAL, CROWN

ITEM	PART #	DESCRIPTION
1	40261082	CP coupling
2-3	40262109	Handle socket
2-9	40262279	CP Handle assembly
4	40262274	Handle grip
5		Plunger
6		Spring
7		Bushing
8	40262297	Handle seal
9	40261139	Handle gasket
5-9	40262305	Handle repair kit
	40261011	New style ADA handle repair kit

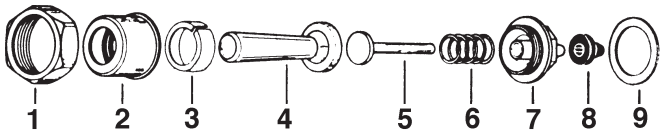

HANDLE FOR GEM

ITEM	PART #	DESCRIPTION
1-7	40268915	CP handle assembly
1		CP socket
2	0307067	CP grip
3		Plunger
3-7	40268916	Handle repair kit
4		Spring
5		Bushing
6	40262297	Handle seal
7	91783515	Handle gasket

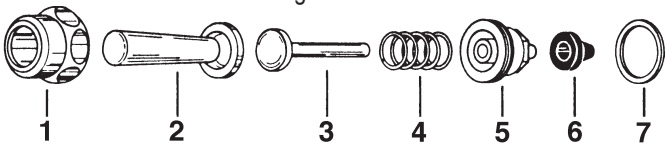

PUSH BUTTON FOR EXPOSED ROYAL & CROWN

ITEM	PART #	DESCRIPTION
1	40261082	CP coupling
2-9	91785035	Push button assembly
5-9	40262305	Push button repair kit
2-3	40262109	CP socket
4	40261025	Index push button
5		Plunger
6		Spring
7		Bushing
8	40262297	Handle seal
9	40261139	Handle gasket

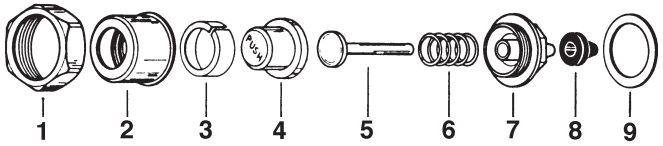

HANDLE FOR EXPOSED NAVAL

ITEM	PART #	DESCRIPTION
1	40261082	CP coupling
2-3	40262109	Handle socket
2-9	91783010	Handle assembly
4	40262274	CP grip
5		Plunger
6		Spring
7		Bushing
8	40262297	Handle seal
9	40261139	Handle gasket
5-9	40262305	Handle repair kit

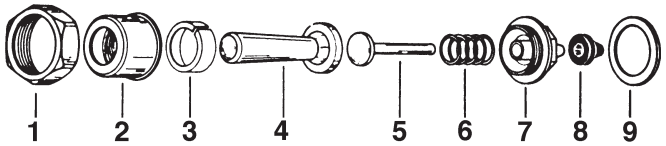

3" PUSH BUTTON FOR EXPOSED ROYAL & CROWN

ITEM	PART #	DESCRIPTION
1-11	40268874	3" Push button assembly
1	40268875	3" Push button (includes 5 & 6)
2	40261082	CP coupling
3-4	40262109	CP socket
5		Shank head
6		RB screw
7		Plunger
8		Spring
9		Bushing
10	40262297	Handle seal
11	40261139	Handle gasket
7-11	40263396	Handle repair kit

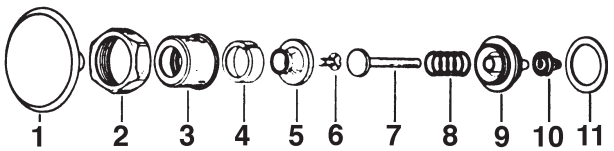

WE HAVE BATTERIES FOR FLUSH VALVES

AA
PART # 30100044

C
PART # 30100057

Lithium (not shown)
PART # 40221175

TMS TOTAL MAINTENANCE SOLUTIONS

HOUSTON 800/392-5066
ORLANDO 800/327-3022
GREENVILLE 800/476-2212

LOOK FOR US ON THE WEB AT: www.TMSSouth.com

SLOAN HANDLE REPAIRS (CONCEALED)

HANDLE FOR CONCEALED ROYAL & CROWN

ITEM	PART #	DESCRIPTION
1	40261032	CP wall flange 2-3/4" OD
	NLA	CP wall flange 3-1/2" OD
2	see below	Wall socket
3	40261033	RB locknut
4	40261024	RB coupling
5	40262274	CP grip
6	see below	Filler rod
7		Plunger
8		Spring
9		Bushing
10	40262297	Handle seal
11	40261139	Handle gasket

ITEM	PART #	DESCRIPTION
7-11	40261026	Handle repair kit
	40262305	Handle repair kit – Handle with flanged wall socket

To order items 1-11 (B-12A Handle assembly), please specify the "L" dimension (face of finish wall to center of supply) 4-3/4" thru 14-3/4" in one inch intervals. See chart below.

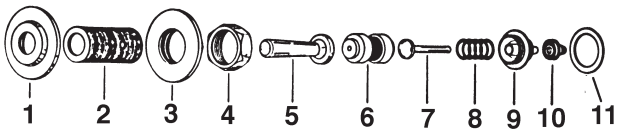

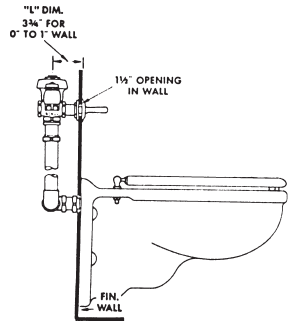

3" PUSH BUTTON FOR CONCEALED ROYAL & CROWN

ITEM	PART #	DESCRIPTION
1	40268875	3" push button (includes 6 & 7)
2	40261032	CP wall flange 2-3/4" OD
	NLA	CP wall flange 3-1/2" OD
4	40261033	RB locknut
5	40261024	RB coupling
6		Shank head
7		Screw
9		Plunger
10		Spring
11		Bushing
12	40262297	Handle seal

ITEM	PART #	DESCRIPTION
13	40261139	Handle gasket
9-13	40261026	Push button repair kit

To order items 1-13 (C-43A 3" PB Handle assembly), please specify the "L" dimension (face of finish wall to center of supply) 4-3/4" thru 10-3/4" in one inch intervals. See chart below.

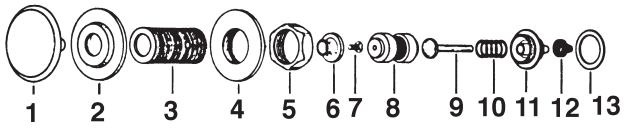

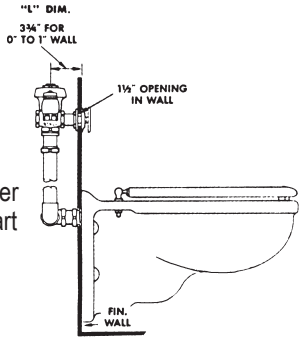

PUSH BUTTON FOR CONCEALED ROYAL & CROWN

ITEM	PART #	DESCRIPTION
1	40261032	CP wall flange 2-3/4" OD
	NLA	CP wall flange 3-1/2" OD
3	40261033	RB locknut
4	40261024	RB coupling
5	40261025	Index push button
7		Plunger
8		Spring
9		Bushing
10	40262297	Handle seal
11	40261139	Handle gasket

To order items 1-11 (C-9A PB Handle assembly), please specify the "L" dimension (face of finish wall to center of supply) 4-3/4" thru 14-3/4" in one inch intervals.

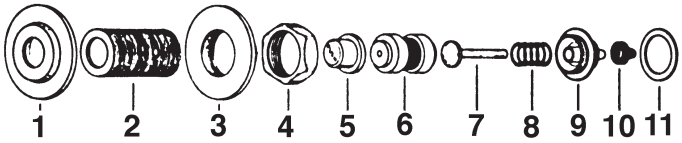

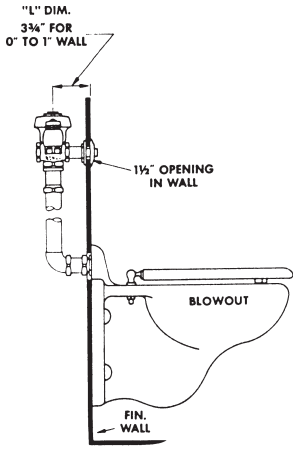

"L" DIMENSION (FACE OF FINISHED WALL TO CENTER OF SUPPLY)

ITEM	DESCRIPTION	4-3/4	5-3/4	6-3/4"	7-3/4	8-3/4	9-3/4	10-3/4	11-3/4	12-3/4	13-3/4	14-3/4
2	B-6-A WALL SOCKET	0302037	0302042	0302050	0302054	0302059	0302063	0302069	0302074	0302077	0302080	0302081
6	B-15-A FILLER ROD	0302197	0302201	0302208	0302211	0302216	0302219	0302223	0302226	0302301	0302232	0302233

TOTAL MAINTENANCE SOLUTIONS

HOUSTON 800/392-5066

ORLANDO 800/327-3022

GREENVILLE 800/476-2212

LOOK FOR US ON THE WEB AT: www.TMSSouth.com

FLUSH VALVES

SLOAN HANDLE REPAIRS (PEDAL, EXPOSED AND CONCEALED)

PEDAL PUSH BUTTON FOR CONCEALED ROYAL & CROWN

ITEM	PART #	DESCRIPTION
1	40268917	CP pedal
2	see chart	Wall socket
3-4		CP flange w/set screw
5	91785054	CP screw
6	see chart	Filler rod
7	40261024	RB coupling
8	40261025	Index push button
9	40261033	RB locknut
10		Plunger
11		Spring
12		Bushing
13	40262297	Handle seal
14	40261139	Handle gasket

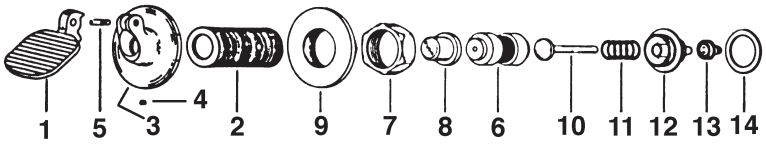

PART #	DESCRIPTION
40261026	Handle repair kit (items 10-14)

To order items 1-14(C-40A Pedal PB assembly), please specify the “L” dimension (face of finish wall to center of supply) 4-3/4" thru 14-3/4" in one inch intervals. See chart bottom of previous page.

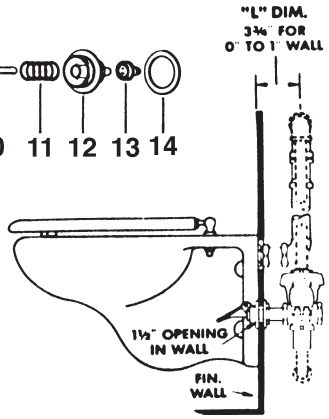

PEDAL HANDLE PUSH BUTTON FOR CONCEALED ROYAL & CROWN

ITEM	PART #	DESCRIPTION
1	91785053	CP pedal handle
2	91785054	CP screw
3-4		CP flange w/sct screw
6	40261033	RB locknut
7	40261024	RB coupling
8	40261025	Index push coupling
10		Plunger
11		Spring
12		Bushing
13	40262297	Handle seal
14	40261139	Handle gasket
	40261026	Repair kit (items 10-14)

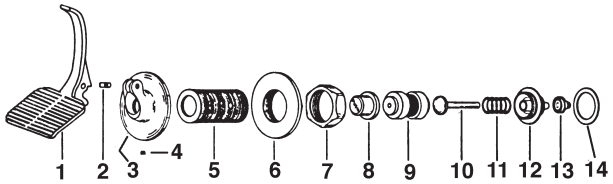

To order items 1-14(C-40A Pedal PB assembly), please specify the “L” dimension (face of finish wall to center of supply) 4-3/4" thru 14-3/4" in one inch intervals. See chart bottom of previous page.

PEDAL HANDLE PUSH BUTTON FOR EXPOSED ROYAL & CROWN

ITEM	PART #	DESCRIPTION
1-10	91785051	Pedal handle assembly
1	91785053	CP pedal handle
2	40261082	CP coupling
3	91785054	CP screw
4		CP socket
5		CP push button
6		Plunger
7		Spring
8		Bushing
9	40262297	Handle seal
10	40268918	Handle gasket
4-10	91785030	Repair kit

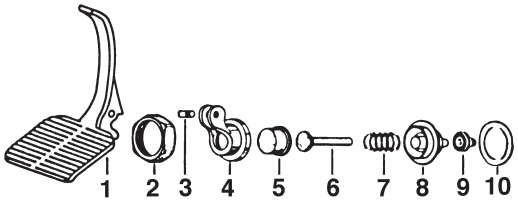

PEDAL PUSH BUTTON FOR EXPOSED ROYAL & CROWN

ITEM	PART #	DESCRIPTION
1-10	40268919	Pedal CP assembly
1	40268917	CP pedal
2	40261082	CP coupling
3	91785054	CP screw
4		CP socket
5		CP push button
6		Plunger
7		Spring
8		Bushing
9	40262297	Handle seal
10	40261139	Handle gasket
4-10	91785030	Repair kit

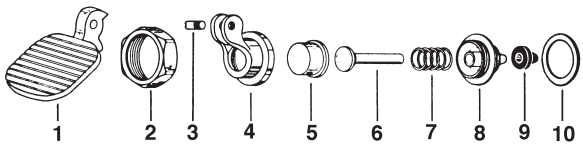

TMS TOTAL MAINTENANCE SOLUTIONS

HOUSTON 800/392-5066
ORLANDO 800/327-3022
GREENVILLE 800/476-2212

LOOK FOR US ON THE WEB AT: www.TMSSouth.com

SLOAN OPTIMA FLUSH VALVE PARTS BREAKDOWN

ITEM	PART #	DESCRIPTION
1		O-ring
2	40261132	Actuator Cartridge Assy. Repair kit
3	40261015	O-ring
4		CP Adapter for solenoid
5		Solenoid Shaft Assy.
6		CP Handle Coupling
7		Solenoid Flux Plate
8		24 VAC Coil
9		CP Solenoid Housing
10		Face Plate for 24 VAC Solenoid
11		CP Nut for Solenoid
12		CP Extension Nipple Adapter
13		CP Nipple Assembly
14		CP Flange Assembly
15		CP Screw
16		CP Cover Plate for Sensor & Solenoid Operator (urinal only)
17		CP Cover Plate for Sensor with Override Switch (closet only)
18		CP Cover Plate for Solenoid Operator (closet only)
19		Yoke Assembly
20	40260301	Urinal Sensor Replacement Kit

ITEM	PART #	DESCRIPTION
21		Override Switch & Yoke Assembly
22	40260304	Closet Sensor Replacement Kit
23	40260300	Complete Solenoid Valve 24V
24	40260314	Exposed Solenoid Valve 24V

ITEM	PART #	DESCRIPTION
25	64789120	Spanner wrench

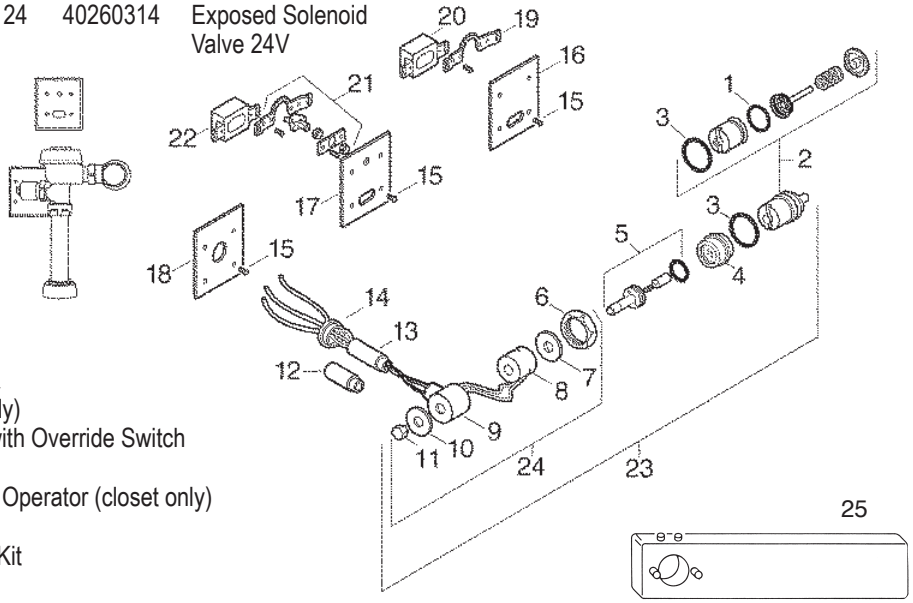

PIPE SUPPORTS & BUMPERS

ITEM	PART #	DESCRIPTION
1	91783630	White plastic bumper
	91789920	1-1/2" Pipe support w/bumper 5 C/E complete

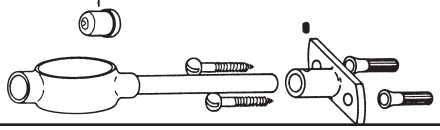

PART #	DESCRIPTION
40268920	1-1/2" Solid ring pipe support CP 5 C/E-complete
40268921	3/4" x 3-1/2" solid ring urinal tailpiece support

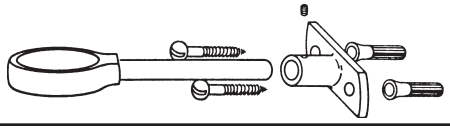

PART #	DESCRIPTION
40261134	1-1/2" Split ring pipe support CP 5 C/E-complete
50900060	1-1/2" Split ring pipe support CP 6 C/E-complete
91789950	1" Split ring pipe support CP 5 C/E-complete
40268922	3/4" x 3-1/2" split ring urinal tailpiece support

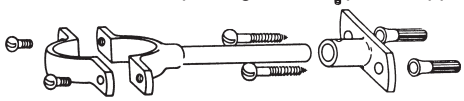

SLOAN FLOOR VALVE REPAIR KITS

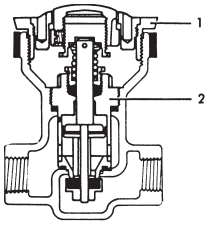

1/2" Floor Valve
Repair Kit 91789906

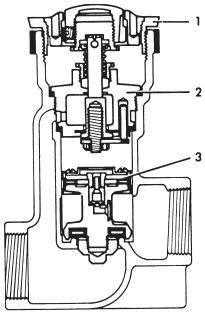

1" & 1-1/4" Floor Valve
Repair Kit 91789904

FLUSH VALVES

SLOAN VACUUM BREAKER PARTS

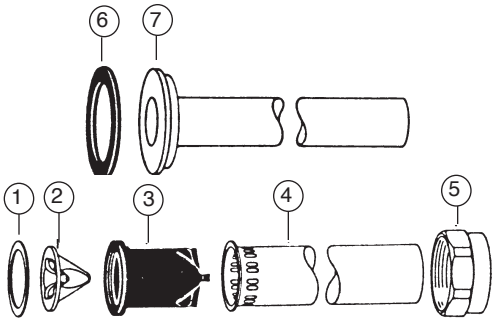

ITEM	PART #	DESCRIPTION
1-3	40201005	Repair kit for V-500 series
	40263005	3/4"x 9" CP vacuum breaker assy.
	40263210	3/4" x 15" CP vacuum breaker assy.
	40263006	1-1/4"x 9" CP vacuum breaker assy.
1-5	40261035	1-1/4"x 13-1/2" CP vacuum breaker assy.
	40261036	1-1/4"x 21-1/2" CP vacuum breaker assy.
	91005530	1-1/4"x 24" CP vacuum breaker assy.
	40261040	1-1/2"x 9" CP vacuum breaker assy.
	40261042	1-1/2"x 13-1/2" CP vacuum breaker assy.
	40261039	1-1/2"x 21-1/2" CP vacuum breaker assy.
	40261036	1-1/2"x 24-1/2" CP vacuum breaker assy.
1	40261047	1-1/2" friction ring
2	40261048	Baffle
3		Rubber sleeve (N/A order kit 91785513)
5	40261049	CP coupling
6	40261050	Gasket
7	40261052	3/4"x 10-1/2" CP outlet

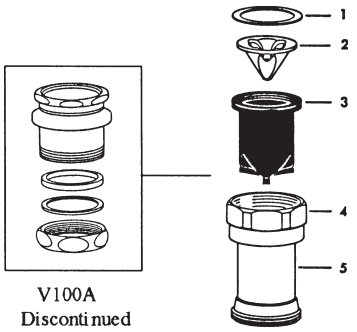

V100A
Discontinued

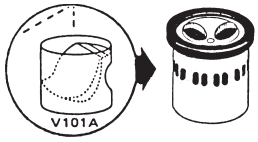

Old Style V101A NLA.
Order new style V101A
PART # 91005504
Rubber Boot Only
PART # 91005528

ITEM	PART #	DESCRIPTION
1-3	40201005	Repair kit for V-500 series
1-3	40263183	Royal vacuum breaker
1-5	40263010	Vacuum breaker assy. V500A

BRASS SPUD PARTS

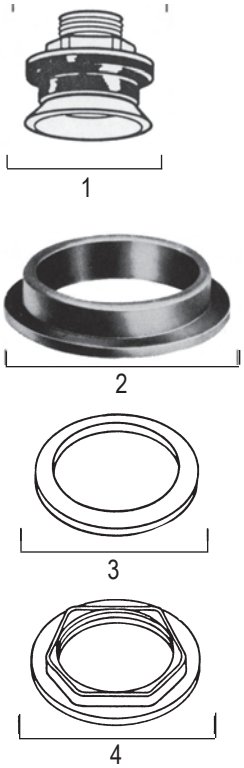

ITEM	PART #	DESCRIPTION
1	40210961	3/4" Brass spud assembly
	40268923	1-1/4 x 3/4 spud
	40210960	1-1/4" Brass spud assembly
	40210959	1-1/2" Brass spud assembly
	40210058	2" Brass spud assembly
	40210020	2"x 1-1/4" Brass spud
	40211068	2"x 1-1/2" Brass spud
2	40211020	3/4" Spud washer
	40211019	1-1/4" Spud washer
	40211018	1-1/2" Spud washer
	40211087	2" Spud washer
	40210022	1" Friction ring for 3/4" spud
3	40210023	1-1/4" Galvanized friction ring
	40210015	1-1/2" Galvanized friction ring
	40210025	2" Galvanized friction ring
4	40210035	3/4" Brass spud nut
	40210036	1-1/4" Brass spud nut
	40210037	1-1/2" Brass spud nut
	40210038	2" Brass spud nut

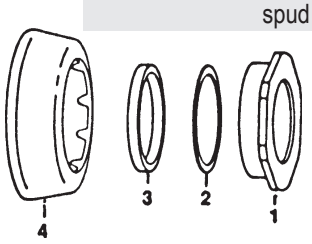

ITEM	PART #	DESCRIPTION
1-4	40266125	3/4" CP spud coupling assy.
	40261053	1" CP spud coupling assy.
	40266140	1-1/4" CP spud coupling assy.
	40266146	1-1/2" CP spud coupling assy.
1-3	40261054	3/4" spud coupling
	40261055	1-1/4" spud coupling
	40261056	1-1/2" spud coupling
2	40261057	3/4" friction ring
	40261058	1-1/4" friction ring
	40261009	1-1/2" friction ring
3	40261059	3/4" SJ gasket
	40261060	1" SJ gasket
	40950107	1-1/4" SJ gasket
	40950008	1-1/2" SJ gasket
4	40261061	3/4" spud flange
	40261062	1-1/4" spud flange
	40261063	1-1/2" spud flange

TOTAL MAINTENANCE SOLUTIONS
HOUSTON 800/392-5066
ORLANDO 800/327-3022
GREENVILLE 800/476-2212
LOOK FOR US ON THE WEB AT: www.TMSSouth.com

SLOAN TAILPIECE ASSEMBLIES & PARTS

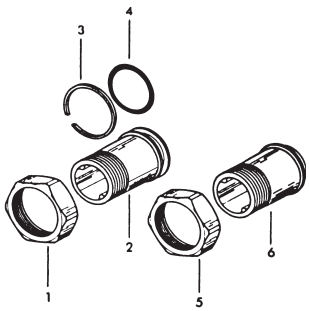

*Adapter For Sloan & Zurn Valves To Delany G.J. Stops
PART # 40221183

ITEM	PART #	DESCRIPTION
1	40268676	Coupling nut for adj. tailpiece
	40268801	2-1/16" Adjusting tailpiece
2-4	40268803	3-1/16" Adjusting tailpiece
	40268805	4-1/16" Adjusting tailpiece
	40268807	5-1/16" Adjusting tailpiece
3	40268381	Lock ring
4	40950069	O-ring
5	40261003	Coupling nut for G.J. tailpiece
6	40261065	1-1/2" G.J. tailpiece
	40261004	1-3/4" G.J. tailpiece
	40261067	2" G.J. tailpiece
	40261068	3-1/4" G.J. tailpiece
	40261069	3-1/2" G.J. tailpiece

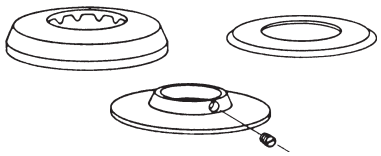

SUPPLY FLANGES FOR IRON PIPE

PART #	DESCRIPTION
40261070	F-7 1/2" IPS CP Flat
40261071	F-7 1" IPS CP Flat
40261072	F-7 1" IPS CP Flat
40261073	F-7 3/4" IPS CP Flat supply
40261077	F-7 3/4" IPS CP Flat
40261074	F-45-A 3/4" IPS CP w/ set screw
40261076	F-45-A 1" IPS CP w/ set screw

SLOAN CONTROL STOP REPAIR KITS

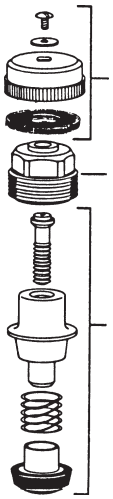

Wheel handle repair kit 1" & 3/4"
PART # 40261078

H-553 Bonnet 1"
PART # 91784008
H-561 Bonnet 3/4"
PART # 40261099

H-600A,H-600AG, H-650AG,H-540A, H-540AG,H-545AG 1" Wheel handle repair kit.
PART # 40261080
H-600A,H-600AG, H-540A,H-540AG 3/4" Wheel handle repair kit.
PART # 40211086

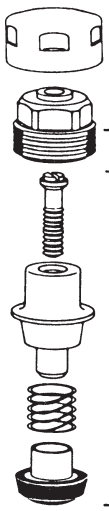

H-573 Cap CP 1"
PART # 91004012
H-582 Cap CP 3/4"
PART # 40268848

H-579 Bonnet 1"
PART # 91784016
H-577 Bonnet 3/4"
PART # 40261083

H-600A,H-600AG, H-650AG,H-540A, H-540AG,H-545AG, 1" Screw driver stop repair kit.
PART # 40201009
H-600A,H-600AG, H-540A,H-540AG, 3/4" Screw driver stop repair kit.
PART # 40261085

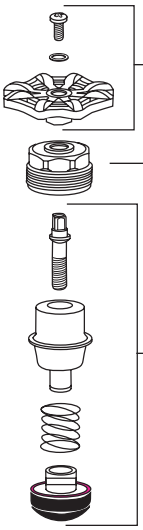

Wheel handle repair kit
PART # 40261087
Bonnet (for 1" H-540, H-600, and H-700 WH Series stops)
PART # 40261018
H-577 Bonnet (for 3/4" H-540 and H-600 Series stops)
PART # 40261019
Control stop repair kit (for 1" H-540, H-600, and H-700 WH Series stops and 3/4" H-700 Series stops
PART # 40261020
Control stop repair kit for 3/4" H-540 and H-600 Series stops
40261031

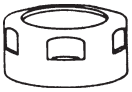

H-586 Cap CP for use with H-574 Bumper
PART # 40261092

H-574 Bumper for use with open front seat
PART # 40261093

SLOAN OBSOLETE CONTROL STOP REPAIR KITS

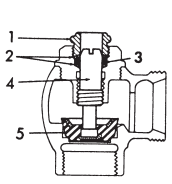

H-440-AG SCREW DRIVER DRIVER 1" AND 3/4"

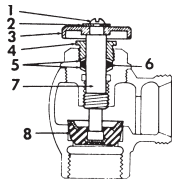

H-440-AG WHEEL HANDLE 1"

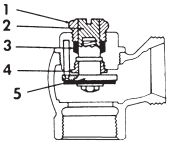

H-40-AG SCREW DRIVER 1"

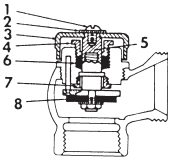

H-40-AG WHEEL HANDLE 1"

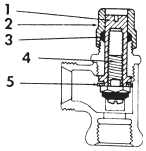

H-20-AG SCREW 3/4" & 1/2"

DESCRIPTION		PART #
H-440-AG 1" SCREW DRIVER STOP	Repair kit incl. items 1-5	40268453
H-440-AG 1" WHEEL HANDLE STOP	Repair kit incl. items 1-8	40261095
H-440-AG 3/4" SCREW DRIVER STOP	Repair kit incl. items 1-5	40268442
H-40-AG 1" SCREW DRIVER STOP	Repair kit incl. items 1-5	40268277
H-40-AG 1" WHEEL HANDLE STOP	Repair kit incl. items 1-8	40261096
H-20-AG 3/4"&1/2" SCREW DR. STOP	Repair kit incl. items 1-5	40268102

SWEAT SOLDER KITS

PART #	DESCRIPTION
40268788	3/4" Supply kit (urinals)
40268782	1" Supply kit

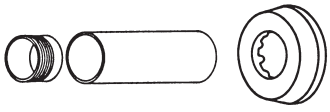

VANDAL RESISTANT STOP CAP W/ SET SCREW

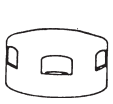

H-573 Cap CP VP 1"
PART # 40261097

H-582 Cap CP VP 3/4"
PART # 40261098

SLOAN H-700 SERIES BAK-CHEK® COMPLETE CONTROL STOPS

H-700 STOP, CHROME PLATED SCREW DRIVER ANGLE STOP WITH H-1010-A VANDAL RESISTANT CAP

PART #	DESCRIPTION
40261100	3/4" NPTF Inlet for adjustable tail
40261101	1" NPTF inlet for adjustable tail

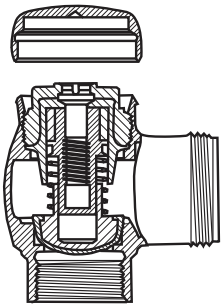

H-710 STOP, CHROME PLATED SCREW DRIVER ANGLE STOP WITH H-573 CAP

PART #	DESCRIPTION
40268025	3/4" NPTF Inlet for adjustable tail
40268757	1" NPTF inlet for adjustable tail
40261102	3/4" NPTF inlet for ground joint tail

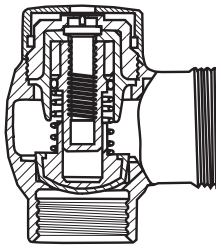

H-735 STOP, CHROME PLATED EXPOSED WHEEL HANDLE ANGLE STOP

PART #	DESCRIPTION
40261103	3/4" NPTF Inlet for adjustable tail
40261104	1" NPTF inlet for adjustable tail
40261105	3/4" NPTF inlet for ground joint tail
40261106	1" NPTF inlet for ground joint tail

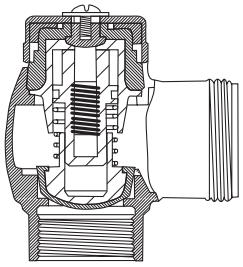

H-750 STOP, SCREW DRIVER STRAIGHT STOP WITH H-1010-A VANDAL RESISTANT CAP

PART #	DESCRIPTION
40261005	1" NPTF inlet for ground joint tail

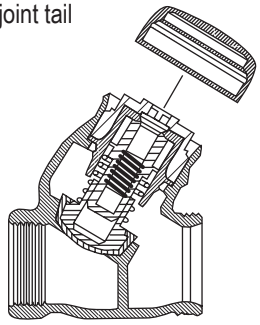

H-740 STOP, CHROME PLATED SCREW DRIVER ANGLE STOP WITH H-37 CAP (REGAL FLUSHOMETER VALVE STOP)

PART #	DESCRIPTION
40268031	3/4" NPTF Inlet for adjustable tail
40268029	1" NPTF inlet for adjustable tail
40261108	3/4" NPTF inlet for ground joint tail
40261109	1" NPTF inlet for ground joint tail

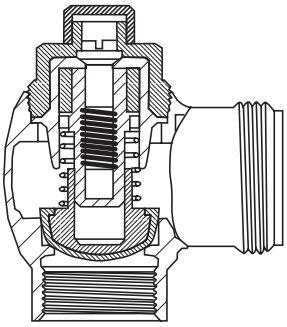

H-790 STOP, CHROME PLATED SCREW DRIVER ANGLE STOP WITH VANDAL RESISTANT CAP (REGAL "XL" FLUSHOMETER VALVE STOP)

PART #	DESCRIPTION
40261110	3/4" NPTF Inlet for adjustable tail
40261111	1" NPTF inlet for adjustable tail
40261114	3/4" NPTF inlet for ground joint tail
40261115	1" NPTF inlet for ground joint tail

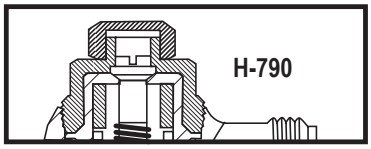

REGAL "XL"

GROUND JOINT ADAPTER

Adapts ground joint stops to valves with adjusting tailpieces.

PART # 40221183

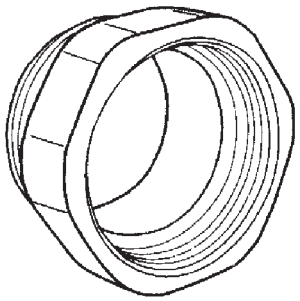

TOTAL MAINTENANCE SOLUTIONS

HOUSTON 800/392-5066 ORLANDO 800/327-3022 GREENVILLE 800/476-2212

LOOK FOR US ON THE WEB AT: www.TMSSouth.com

SPEAKMAN PISTON FOR UNITS PURCHASED PRIOR TO 1954

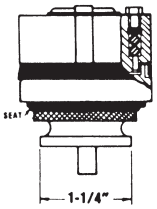

All standard type water closets, pedestals & syphon jet urinals
PART # 40201017

All stall and flat back lipped urinals
PART # 40201018

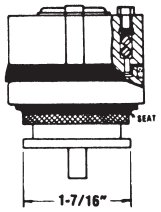

SPEAKMAN HANDLE ASSEMBLY – FOR VALVES AFTER 1954

PART # 40201019

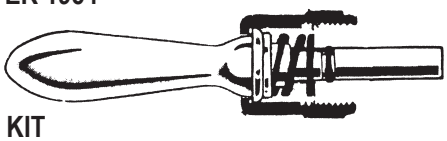

HANDLE REPAIR KIT
PART # 40201020

SPEAKMAN OLD STYLE HANDLE ASSEMBLY– FOR FLUSH VALVES PRIOR TO 1954

PART # 15890177

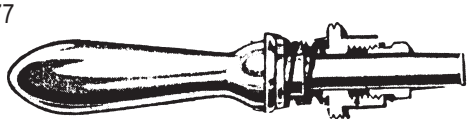

TOTO RELIANCE COMMERCIAL LINE VACUUM BREAKER & ANGLE STOP SET FOR URINAL WITH EXPOSED TOP SPUD – 3/4" OUTLET

ITEM	PART #	DESCRIPTION
1		Exposed top spud (3/4" outlet)
2	See page 28	Sweat solder kit for urinal
3		Wall flange
4		Sleeve cover
5		Solder adapter
6		Angle stop, urinal, chrome plated
7	40240077	Angle stop repair kit
8		Angle stop cover
9	40241077	Angle stop cap
10	40201005	Vacuum breaker repair kit
11		Tube assembly (3/4" x 8-1/2")
12	40261057	Friction ring
13	40261059	Gasket
14	See page 27	Spud nut & escutcheon 3/4"

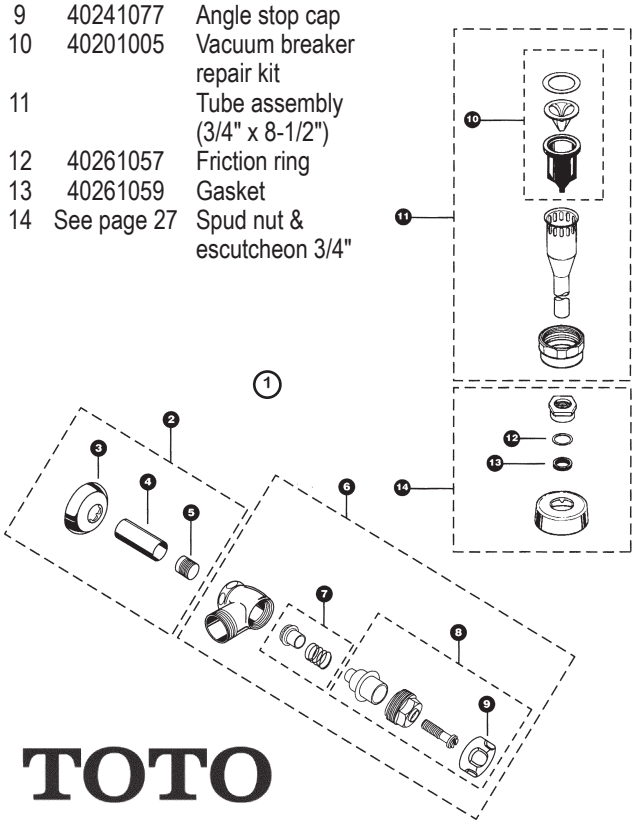

TOTO

TOTO RELIANCE COMMERCIAL LINE VACUUM BREAKER & ANGLE STOP SET FOR TOILET WITH EXPOSED TOP SPUD – 1-1/2" OUTLET

ITEM	PART #	DESCRIPTION
1		Exposed top spud (1-1/2" outlet)
2	See page 28	Sweat solder kit for toilet
3		Wall flange 1"
4		Sleeve cover 1"
5		Solder adapter 1"
6		Angle stop 1", toilet, chrome plated
7	40240733	Angle stop repair kit 1"
8		Angle stop cover 1"
9	40240774	Angle stop cap 1"
10	40201005	Vacuum breaker repair kit
11		Tube assembly (1-1/2" x 8-17/32")
12	40261009	Friction ring
13	40210039	Gasket
14	See page 27	Spud nut & escutcheon 1-1/2"

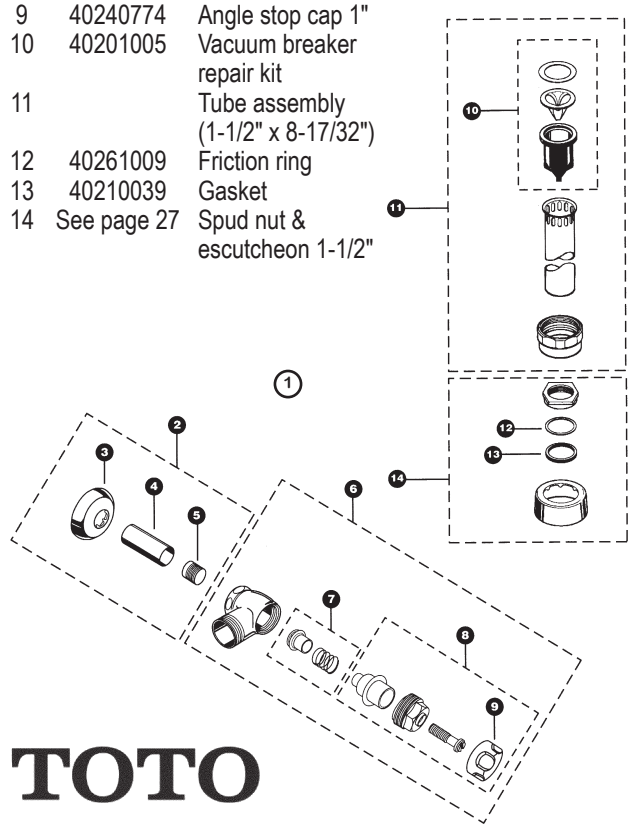

TOTO

TOTAL MAINTENANCE SOLUTIONS

HOUSTON 800/392-5066
ORLANDO 800/327-3022
GREENVILLE 800/476-2212

LOOK FOR US ON THE WEB AT: www.TMSSouth.com

FLUSH VALVES

TOTO RELIANCE COMMERCIAL LINE
MANUAL FLUSH VALVE, EXPOSED –
1.0 & 3.5 GPF URINAL, 1.6 GPF TOILET
TMU1HNCR & TMT1HNCR SERIES

ITEM	PART #	DESCRIPTION
1	40241002	Lever assembly – MFV
2		Valve cover set (1.0 gpf)
		Valve cover set (1.6 gpf)
3	92751305	U-packing (for piston)
4	40245993	Piston assembly (1.0 & 3.5 gpf)
	40241001	Piston assembly (1.6 gpf)
5		Fiber washer
6		Locking ring
7		O-ring (tail piece)
8		Gasket (U-packing)
9		Screw cap (MFV & angle stop)
10		Adjustment screw (urinal)
11		O-ring (cap screw)
12		O-ring (valve guide)
13		Nut
14		Tail piece
15		Seat packing set
16		Adjustment screw (toilet)
17		Screw cap (toilet)

TOTO

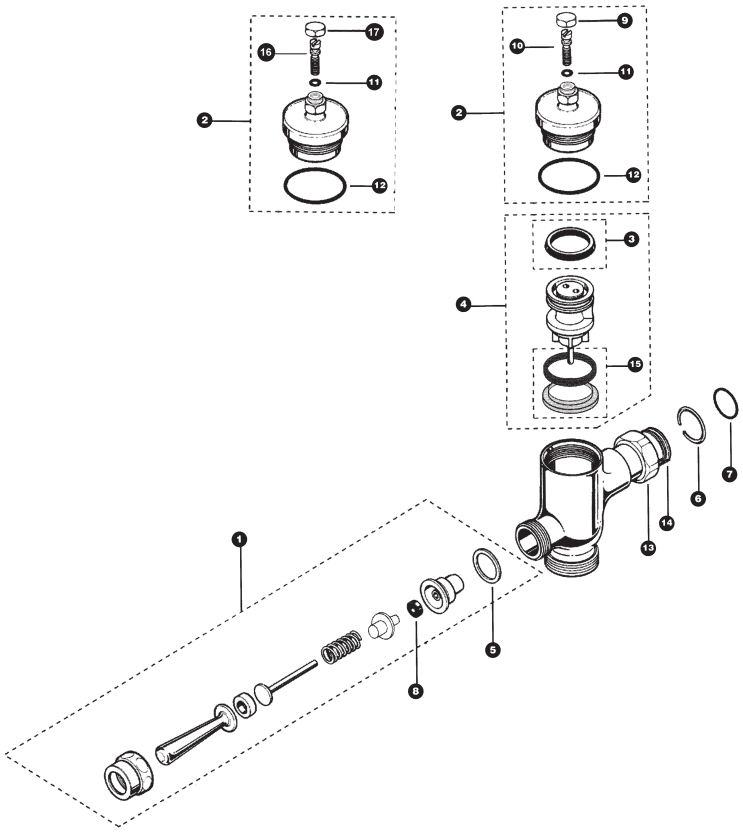

TOTO RELIANCE COMMERCIAL LINE
MANUAL FLUSH VALVE, EXPOSED – 1.0, 1.6 & 3.5 GPF
TMU1HNC & TMT1HNC SERIES

ITEM	PART #	DESCRIPTION
1	40241002	Lever assembly, MFV
2		Valve cover set (1.0 gpf)
		Valve cover set (1.6 gpf)
3	40241004	U-packing (for piston)
4	40241000	Piston assembly (1.0 gpf & 3.5 gpf)
	40241005	Piston assembly (1.6 gpf)
5		Fiber washer
6		Locking ring
7		O-ring (tail piece)
8		Gasket (U-packing)
9		Guide ring
11		Screw cap (MFV & angle stop)
12		Cap adjustment screw (TMU1HNC)
12		Cap adjustment screw (TMT1HNC)
13		O-ring (cap screw)
14		O-ring (valve guide)
15		Valve body (MFV) – new
16		Nut
17		Tail piece

TOTO

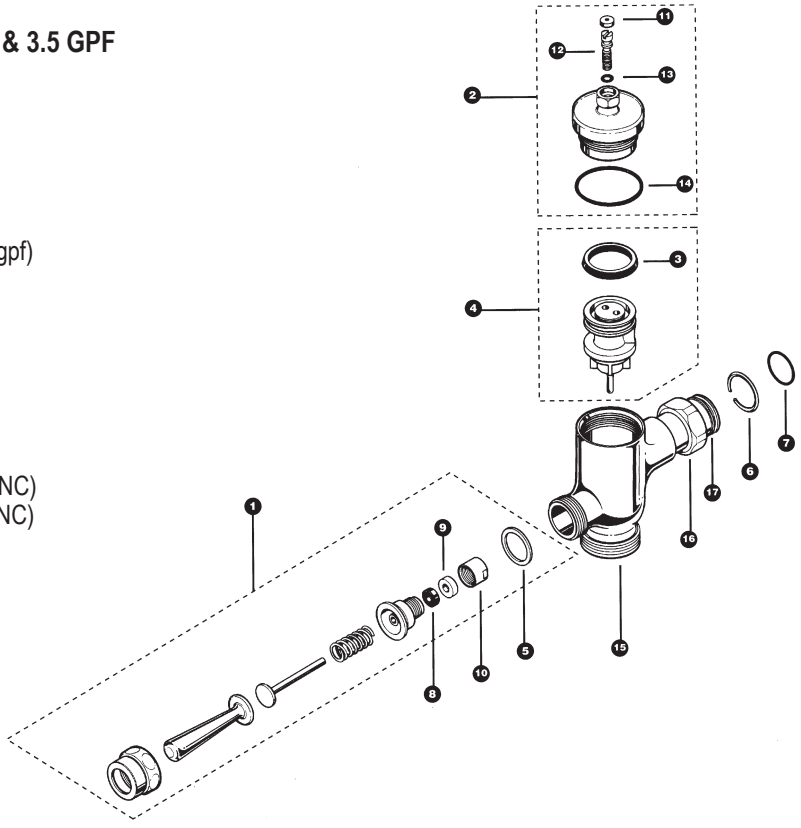

TOTAL MAINTENANCE SOLUTIONS
HOUSTON 800/392-5066
ORLANDO 800/327-3022
GREENVILLE 800/476-2212
LOOK FOR US ON THE WEB AT: www.TMSSouth.com

TOTO RELIANCE COMMERCIAL LINE AUTOMATIC TOILET FLUSH VALVE BATTERY POWERED (6V, DC)

ITEM	PART #	DESCRIPTION
1		Front cover, right (white)
		Front cover, right (stainless)
2		Sensor cover set
3		Sensor unit ("AA" battery)
4	92755947	Outside manual push button assembly
5		Spanner wrench tools
6		Vandal proof screws (white)
		Vandal proof screws (stainless)
7		Seal washer set
8		Rear cover, right (white)
		Rear cover, right (stainless)
9	92751002	Piston assembly
10		Valve cap set
11		Inside manual button assembly
12		Self-cleaning diaphragm & cap
13	92759196	Solenoid ("AA" battery)
14		Screws
15		Solenoid o-ring set
16		Nut stoppers
17		O-rings (tail piece)

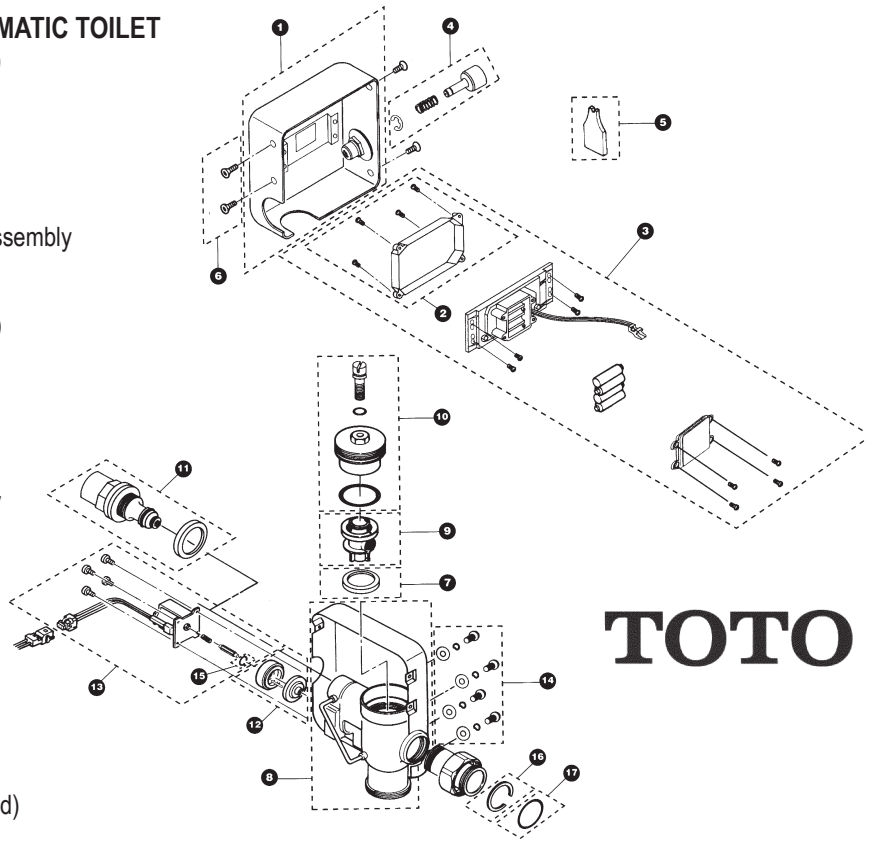

Note: Sensor unit does not include "AA" batteries.

Replacement batteries: PART # 64741006 (4 required)

TOTO AUTOMATIC URINAL FLUSH VALVE BATTERY POWERED (LITHIUM)

ITEM	PART #	DESCRIPTION
1		Front cover
2		Screw concealers
3		Vandal proof screw (stainless)
4		Screw set
5		Screw (sensor cover)
6		Sensor cover set
7		Screw (sensor & solenoid)
8	40221175	Lithium battery (2CR5)
9		Battery cover
10		Screw
11		Battery cover set
12		Sensor unit (Lithium battery)
13		Allen wrench
14		Adjustable screw
15		O-ring
16		Valve cap
17		O-ring
18		Spring
19	92751004	Piston assembly
20		Piston valve assembly
21		Screw (sensor & solenoid)
22		Spring
23		Plunger
24		O-ring (diaphragm cap)
25		Diaphragm cap
26		Diaphragm
27		Solenoid set (includes spring & plunger)
28	92755922	Solenoid assembly (lithium battery)
29		Main body
30		Inlet nut
31		Tail piece
32		Nut stoppers
33		O-ring
34		Valve unit
35		Rear cover
36		Screw set

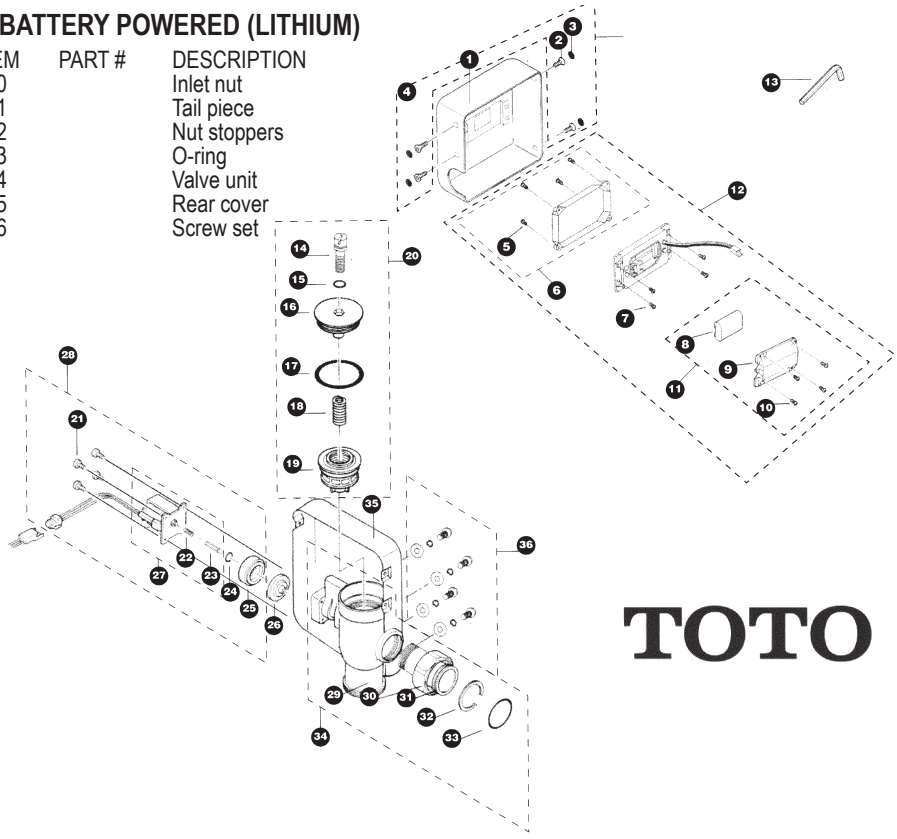

FLUSH VALVES

TOTO RELIANCE COMMERCIAL LINE SENSOR TOILET FLUSH VALVE, EXPOSED 1.0 GPF, 1.6 GPF AND 3.5 GPF – BATTERY POWERED (6V, DC)

ITEM	PART #	DESCRIPTION
1		Battery case cover
2		Battery case assembly
3		Phillips pan head screw
4		Hex socket cap screw
5		Top cover (DC type)
6		Sensor bracket set
7		Sensor controller – DC toilet
8		Allen wrench
9		Copper tube sub-assembly with packing
10		Copper tube
11		Back-up rings
12		O-ring (tube assembly)
13		Double sems screw
14	92750503	Solenoid unit & diaphragm assembly
15	92751101	Solenoid valve seat assembly
16	92751201	O-ring (plunger guide)
17		Push button valve assembly (toilet) (see #19)
18		Push button set (see #19)
19	92751501	Push button set
20	92752002	Push button repair kit (toilet)
21		Gaskets (U-packing)
22		Guide rings
23		Guide ring stoppers
24		E-rings
25	92751701	Gaskets (plunger guide)
26		Locking rings
27		O-ring (tail piece)
28		Lower toilet cover seat
29		Screw set
30		Cap adjustment screw
31		O-ring (cap screw)
32		Valve cap assembly
33		O-ring (valve cap)
34		O-ring (valve guide)
35		U-packing (for piston)
36	40241000	Piston assembly (1.0 gpf & 3.5 gpf)
	40241005	Piston assembly (1.6 gpf)
37		Plate
38		Valve body (EFV) – no logo
39		Nut
40		Tail piece

Note: Allen wrench is for reference purpose only.

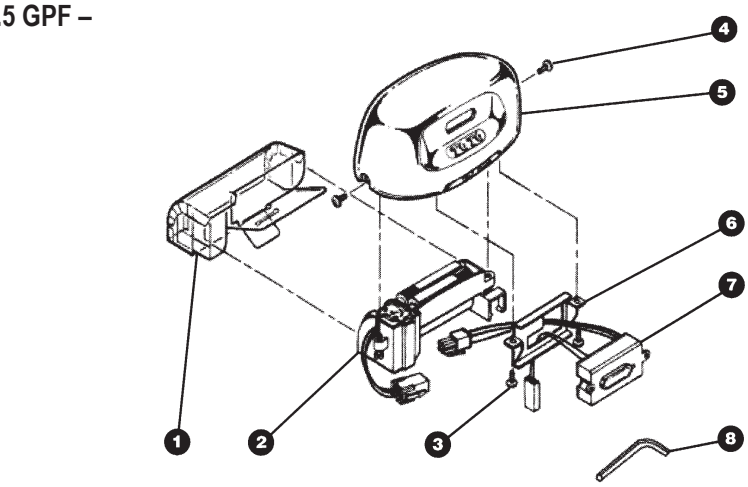

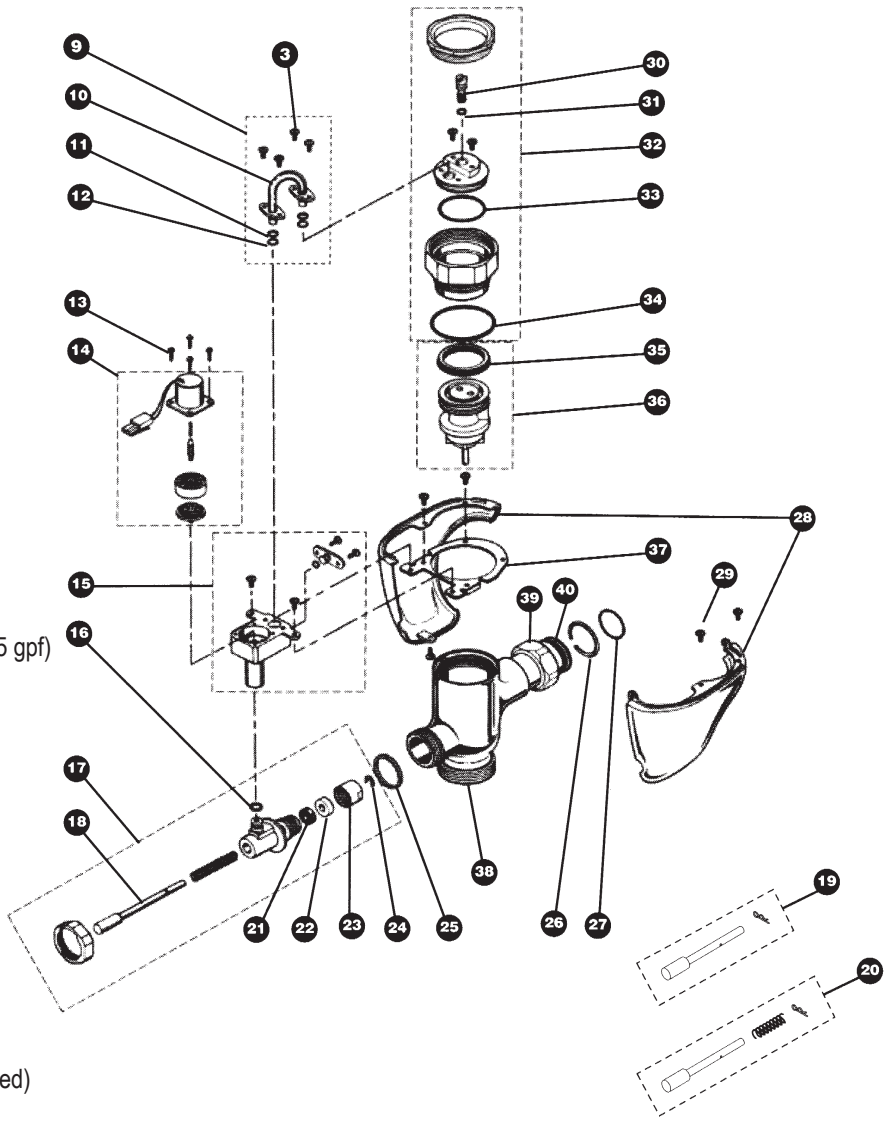

TOTO

Replacement batteries: PART # 64741006 (4 required)

TOTO RELIANCE COMMERCIAL LINE ECOPOWER™ SENSOR FLUSH VALVES WITH HYDRO-POWER CHARGE

ITEM	PART #	DESCRIPTION
1		Top cover
2		Hex socket pan head cap screw M4 set
3		Clamp set
4	40240025	Sensor controller and packing set
5		Holder
6		Glass and packing set
7	40240050	Back up battery
8		Controller
9		M4 screws
10		Lower cover set
11		Tool (allen wrench)
12		Valve body
13		Valve cap assembly
14		O-rings
15		O-ring set (valve cap) 10 pieces
16		O-rings (valve guide)
17	40240060	Piston assembly – urinal 1.0 - 3.5 gpf
	40240040	Piston assembly – toilet 1.6 gpf
18		U-packing (for piston)
19		Double Sems screw M3
20		Solenoid unit & diaphragm assembly
21		Seat packing set
22		Manual flushing button
23		O-rings (manual flushing button)
24		O-rings (manual flushing button)
25		Nut
26		Locking rings
27		Tailpiece
28		O-rings (tailpiece)
29		Double Sems screws M3
30		Hydro-Power Generator

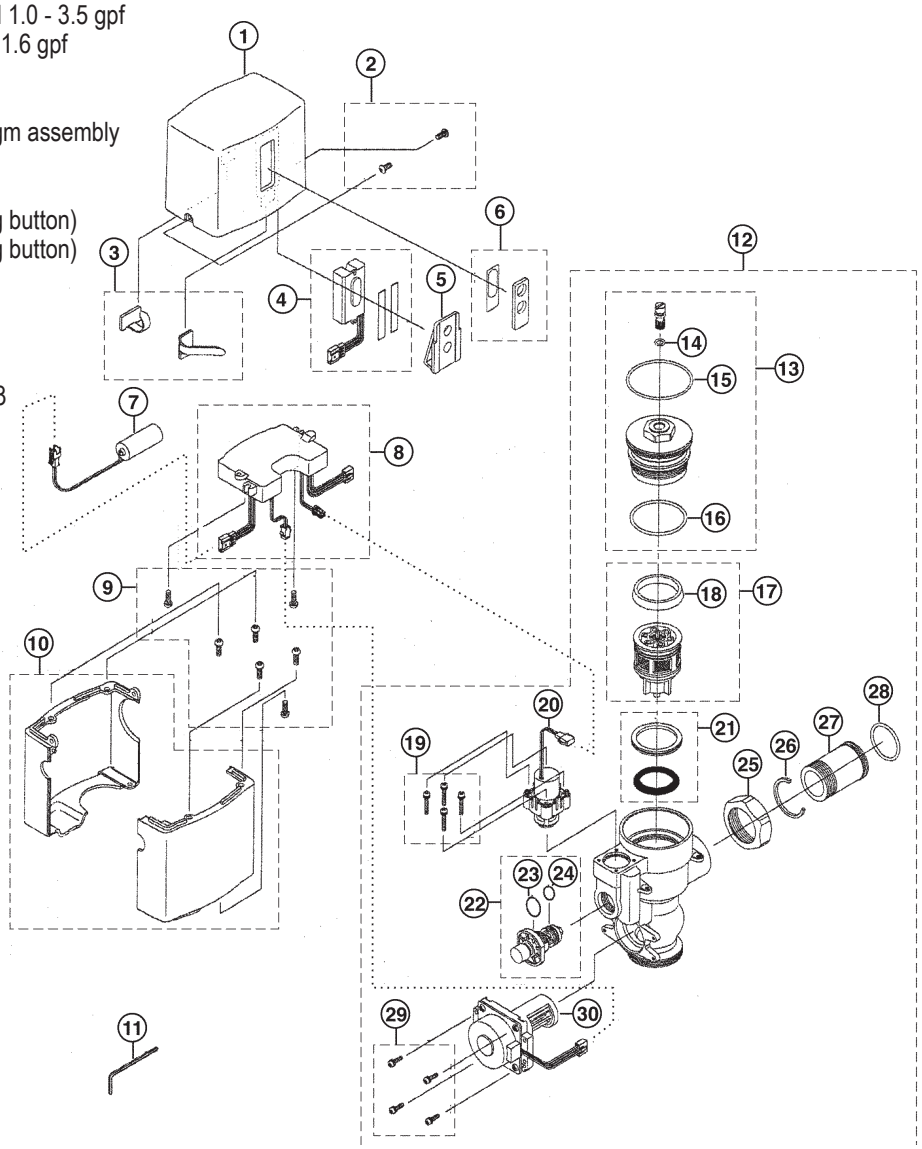

FLUSH VALVES

TOTO SENSOR TOILET FLUSH VALVE, EXPOSED 1.6 GPF – BATTERY POWERED (6V, DC)

ITEM	PART #	DESCRIPTION
1		Gasket
2	92751305	U-packing (for piston)
3		Locking ring
4		O-ring (tail piece)
5		O-ring (cap screw)
6		O-ring (valve guide)
7		Seat packing set
8		Nut
9		Tail piece
10	92750300	Solenoid unit & diaphragm assembly
11		Double sems screw
12		O-ring (valve cap)
13		O-ring (push rod)
14		Valve cap assembly – toilet
15	40241001	Piston assembly (1.6 gpf)
	40245993	Piston assembly (3.5 gpf)
16		Battery case – DC
17		Hex socket pan head cap screw set
18		Top cover DC type
19		Sensor controller – DC toilet
20		Glass & packing set
21	92750319	Push rod assembly
22		Lower toilet cover set
23		Valve body for exposed (toilet 1.6 gpf)
24		Screw set

Replacement batteries:
PART # 30100044
(4 required)

Note: Allen wrench is for reference purpose only.

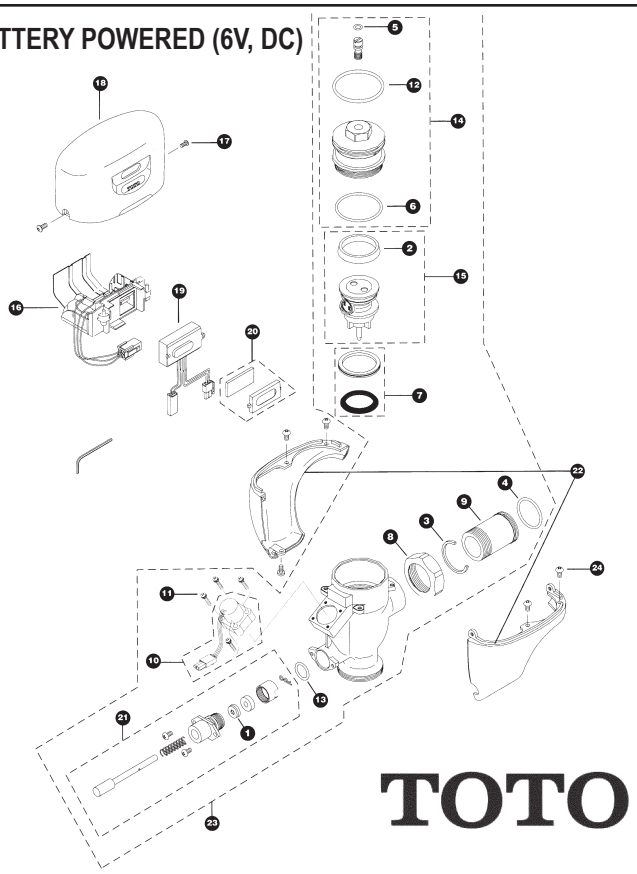

URINAL STRAINERS

PART #	DESCRIPTION
09893925	Kohler strainer plate
09893926	Strainer screw (2 required)

PART #	DESCRIPTION
09893927	China grate (2-15/16" c-c)
09893928	China grate screw (2 required)

PART #	DESCRIPTION
01892234	American Standard beehive strainer 2-11/16" diameter
01891024	Screw for behive stainer

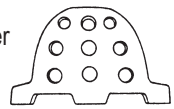

PART #	DESCRIPTION
40211297	Kohler Beehive strainer w/screw and back-up plate

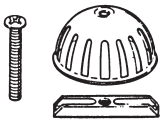

PART #	DESCRIPTION
01890930	American Standard urinal strainer
01890162	Screw for strainer (2 required)

PART #	DESCRIPTION
01892240	American Standard flat urinal strainer 2-3/4" c-c on holes
01890162	Screw for strainer (2 required)

PART #	DESCRIPTION
47001088	Replacement Beehive urinal strainer assy

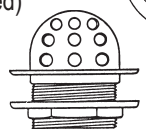

URINAL PLUGS

PART #	X	Y	WHERE USED
40211347	23/32"	3/4"	Am. Std., Kohler
04001000	1"	1/2"	Crane
40210050	5/8"	3/4"	Kohler

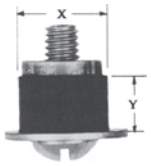

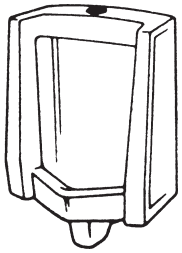

URINAL SCREENS

ITEM	PART #	DESCRIPTION
1	40211040	Urinal screen with cinnamon deodorant block
2	40211246	Urinal screen – 100% vinyl-chemical resistant 4-1/2" x 10-3/4" x 11-3/8"
3	40211042	Urinal screen-100% vinyl-chemical resistant 7" x 12-3/4" x 12-1/4"
4	40211309	Deod-o-screen with 30 day built-in deodorant

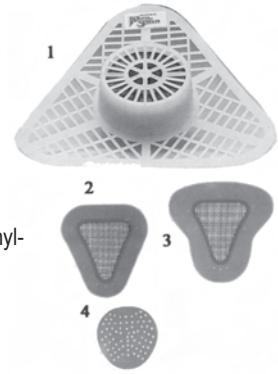

TMS TOTAL MAINTENANCE SOLUTIONS
HOUSTON 800/392-5066
ORLANDO 800/327-3022
GREENVILLE 800/476-2212
LOOK FOR US ON THE WEB AT: www.TMSSouth.com

LOOKING FOR WATROUS PARTS? CALL US!
Series 300, Series 500, Series 200, Imperial, Polaris

ZURN FLUSHTROL REPLACEMENT PARTS

PART #	DESCRIPTION
92992510	Diaphragm control cartridge

PART #	DESCRIPTION
40296037	Handle internal cap assembly

ZURN MODEL Z-6001-ES-S AND Z-6003-ES-S
SENSOR OPERATED EXPOSED SYSTEMS

ITEM	PART #	DESCRIPTION
1	40291000	Actuator assembly
1A	40261082	Handle nut
2		Return tube
3		1/16 comp. fitting
3A		1/8 comp. fitting
4		Supply tube
5		Supply tube cover ring
5A		Supply tube cover
6		Return cover tube ring
6A		Return cover tube
7		Screws (4 required)
8		Cover plate
9		Elbow fittings (set of 2)
10	40291023	Solenoid
11	92995020	Sensor for closet
	92995022	Sensor for urinals
12	40261139	Handle gasket
13		Sensor screws
14		Sensor cover plate
15		Screws
16		Wall plate
17		Indicator light
18		Screws

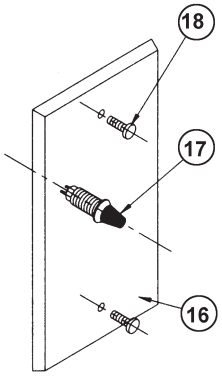

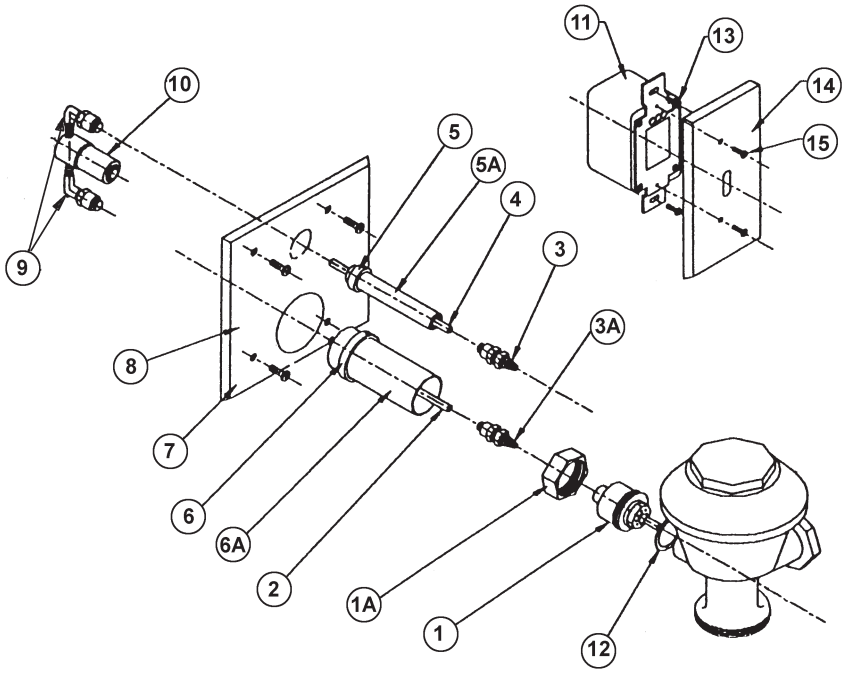

FLUSH VALVES

ZRK-ZURN RETRO-FLUSH

ITEM	PART #	DESCRIPTION
1	92991018	Main valve body cover
2	40221170	Plastic inside cover
3	40291027	Diaphragm
4	40221177	Urinal inside parts kit, 1.5GPF
4	40291032	Urinal inside parts kit, 1.0GPF
4	40291026	Closet inside parts kit, 3.5GPF
4	40296038	Closet inside parts kit, 1.6GPF
5	40291037	Trip mechanism
6	40221085	6V DC Closet sensor
	40221059	Complete 3.5 closet Retro-Flush unit
	40291085	Complete 1.5 urinal Retro-Flush unit
7	40291087	Solenoid valve replacement kit
8	92991225	Hex wrench

* For Battery Replacement ZURN Recommends
Duracell Alkaline - 4 AA's
PART # 64741006

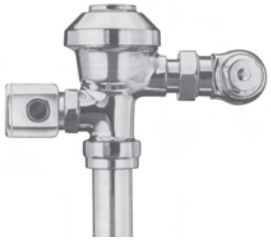

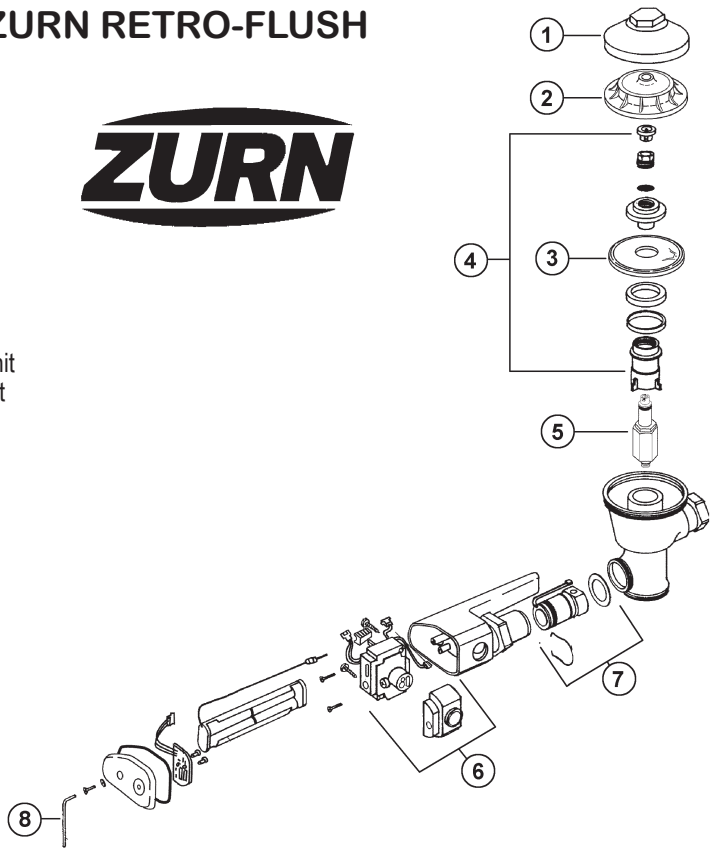

ZURN BEDPAN DIVERTER

ITEM	PART #	DESCRIPTION
1		Diverter body
2	40291003	Elbow assembly
3	40291022	Spray disc and screen
4		Spary disc screw
5		Wall flange with set screw and mounting hardware
6		Support rod
7	92997016	Spray arm assembly – 12"
8	92997014	Spray arm repair kit (includes o-ring, spray disc, screen and screw)
9		Bottom tube
9A		Optional offset tube
10		Coupling assembly
11	40291017	Spud coupling assembly
12		Vacuum breaker tube
13	40261049	Tube nut
14	40201005	Vacuum breaker repair kit
	40291017	Bedpan diverter rebuild kit (includes 8, 2 (except elbow, tube gasket)

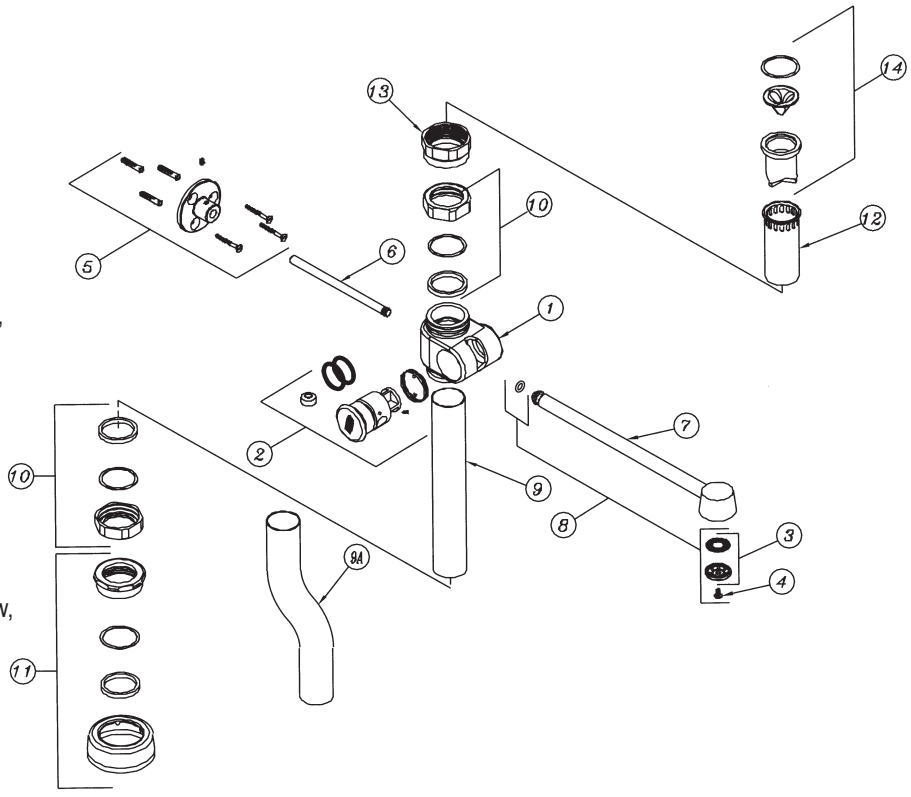

TOTAL MAINTENANCE SOLUTIONS
HOUSTON 800/392-5066
ORLANDO 800/327-3022
GREENVILLE 800/476-2212
LOOK FOR US ON THE WEB AT: www.TMSSouth.com

ZURN METROFLUSH

ITEM	PART #	DESCRIPTION
1		Handle nut
2		Valve body cover
3		Cover gasket
4	40291006	Closet kit 3.5 GPF
	92996200	Closet kit 1.6 GPF
	92996016	Urinal kit 1.0 GPF
5	92996020	Main seat
6	40291014	Handle repair kit
7	92996006	ADA handle assembly
8	91786022	Tailpiece o-ring
9	40268381	Snap ring
10	40268676	Locking nut

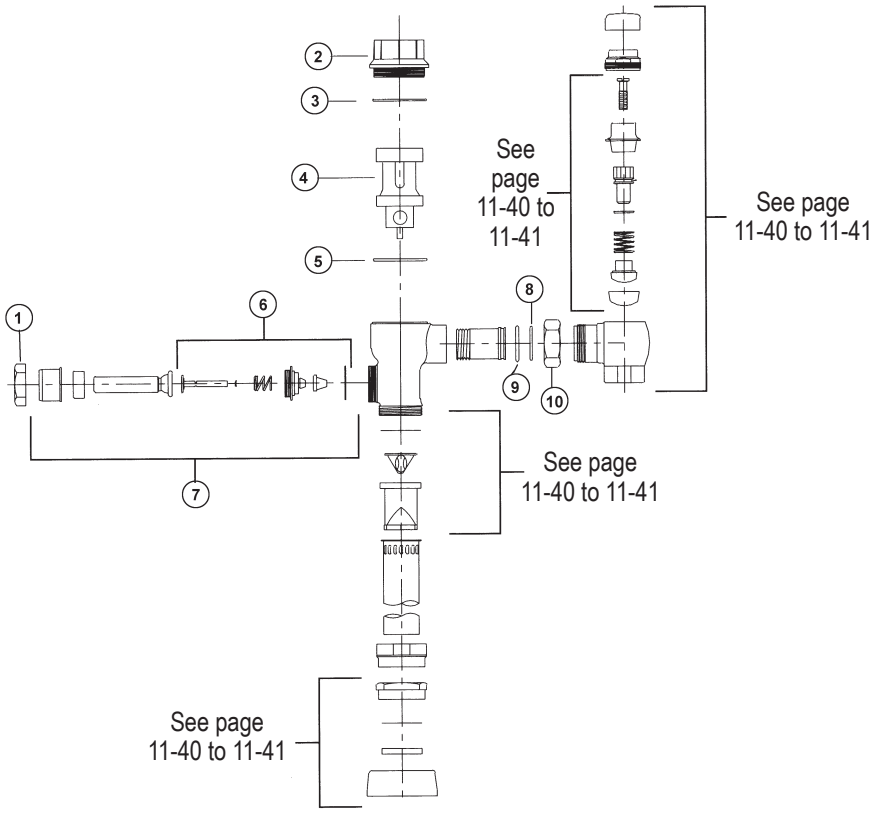

ZURN ZEMS SERIES

ITEM	PART #	DESCRIPTION
1		10' power cord
2	92995010	Actuator/sensor – exposed units
3	40261139	Handle seal
4		120VAC/6VDC power converter
5	92995012	Actuator/sensor – concealed units
6		Override push button assembly
7		Sensor cover plate with override hole
8	92995020	Sensor for closets
	92995022	Sensor for urinals
9		Urinal sensor cover plate

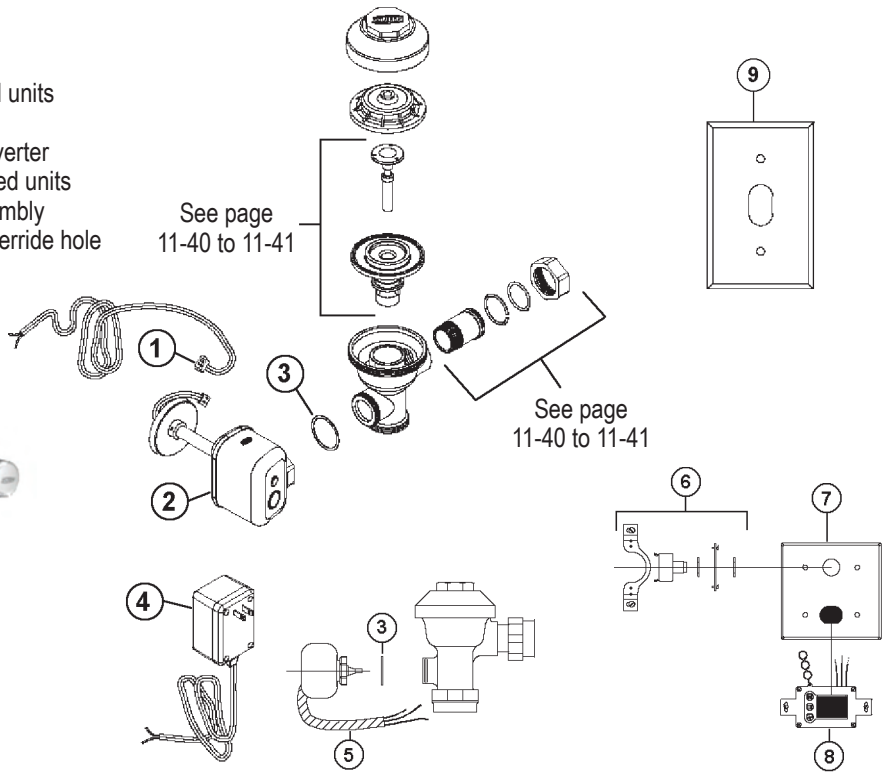

TOTAL MAINTENANCE SOLUTIONS

HOUSTON 800/392-5066
ORLANDO 800/327-3022
GREENVILLE 800/476-2212

LOOK FOR US ON THE WEB AT: www.TMSSouth.com

FLUSH VALVES

ZURN AQUAVANTAGE™ FLUSH VALVES – EXPOSED AND CONCEALED

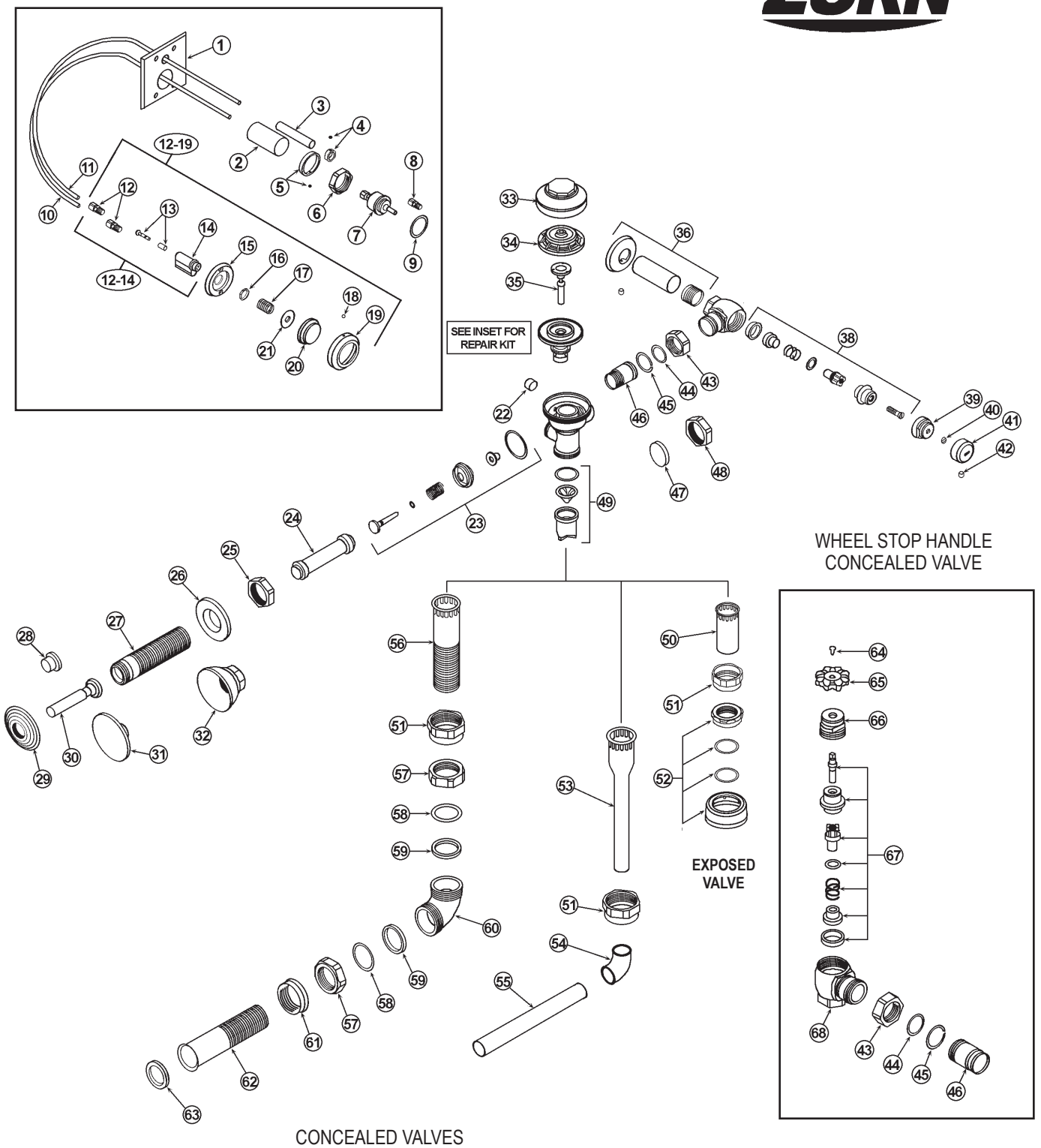

CONCEALED VALVES

ITEM	PART #	DESCRIPTION
1		Chrome cover plate
2		Return cover tube
3		Supply cover tube
4		Cover tube ring with setscrew
5		Cover tube ring with setscrew
6		Handle nut
7	40291000	Hydraulic plunger assembly
8		1/16” Compression fitting
9		Gasket
10		1/4” Return tube
11		1/4” Supply tube
12		1/8” Compression fitting
13	40291001	Repair kit for hydraulic actuator
14		Actuator body
12-14	40291002	Hydraulic actuator assy. – fixture wall
	40291003	Hydraulic actuator assy. – side wall
15		Mounting plate
16	40291004	Securing nut
17	40291005	Spring for large push button
	40291006	Spring for small push button
18		Escutcheon setscrew
19		Escutcheon for large push button
12-19	40291007	Hydraulic metal PB – penal use
	40291008	Hydraulic large PB – side wall
	40291022	Hydraulic metal PB assy.
20	40291009	Large push button
	40291010	Small push button
21		Spacer for large push button
22		Filter
23	92997014	Handle repair kit
24		Push rod/filler rod (specify length)
25		Handle nut
26		Adjusting nut
27		Sleeve/socket (specify length)
28	40291014	Optional 1” metal push button
29	40291015	Wall escutcheon
30		Handle
31		Optional 3” metal push button
32		Optional bell nut
33		Valve body cover

ITEM	PART #	DESCRIPTION
34	40261124	Plastic cover
35	40261129	Trip mechanism – white
	40260415	Trip mechanism – black
36	40268788	3/4” Sweat adapter kit
	40268782	1" Sweat adapter kit
37		Stop body
38	92997016	Stop repair kit 3/4” & 1”
	40291017	VP Stop repair kit 3/4” & 1”
39	40291018	Stop cap
40	40296003	Snap cap screw cover
41	40291019	Vandal-resistant control stop cover
42	40291020	Setscrew for control stop cover
43	40268676	Locking nut
44	91786022	Tailpiece o-ring
45	40268381	Snap ring
46	40268801	Tailpiece – 2-1/16”
47		Solid gasket
48		Solid handle nut
49	40201005	Vacuum breaker repair kit
50		Vacuum breaker tube (see page 23)
51	40261049	Vacuum breaker tube nut
52	40266146	1-1/2” Spud coupling assembly
	40266140	1-1/4” Spud coupling assembly
	40266125	3/4” Spud coupling assembly
53		Vacuum breaker tube
54		3/4” 90° Elbow
55		3/4” Horizontal tube
56		Vacuum breaker tube (see page 51)
57	40800033	Coupling nut
58	40261009	Spud friction washer
59	40950008	Spud friction gasket
60		90° Elbow
61		Spud nut
62		Flanged/scored horizontal tube
63		P30 flat gasket
64		Wheel handle screw
65		Wheel handle w/ screw
66		Stop cap
67	40291021	Wheel handle repair kit
68		Stop body

ZURN AQUAFLUSH DIAPHRAGM KIT

Replacement Parts Kit includes items 1, 2, 3 & 4 Part # 92991270

ITEM	DESCRIPTION
1	Black flow ring for 1.0 gpf urinal w/ black trip mechanism
2	White flow ring for 1.6 gpf closet w/ white trip mechanism
3	Yellow flow ring for 3.5 gpf closet w/ white trip mechanism or 1.5 gpf urinal w/ black trip mechanism
4	Diaphragm (Diaphragm only Part # 40291027)

ZURN AQUAFLUSH INSIDE PARTS KIT

PART #	DESCRIPTION
40291036	Closet kit 4.5 gpf
40296035	Closet kit 3.5 gpf
40296039	Closet kit 1.6 gpf
40291025	Urinal kit 1.5 gpf
40291031	Urinal kit 1.0 gpf

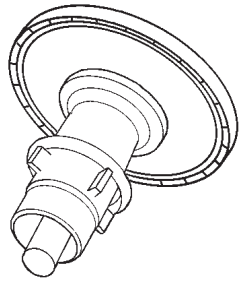

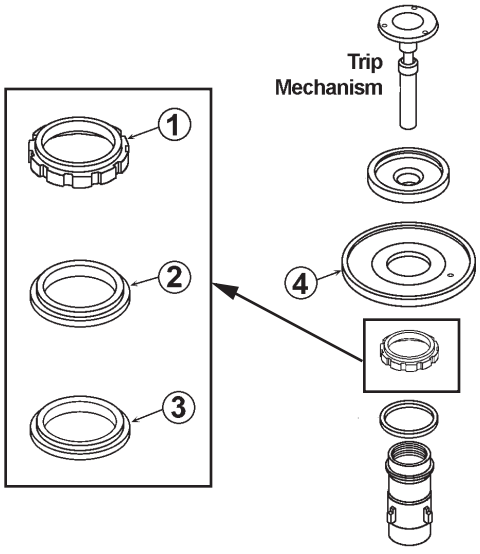

FLUSH VALVES

ZURN BATTERY POWERED AUTOMATIC SENSOR RETROFIT FOR CONCEALED FLUSH VALVES

PART # 40291043

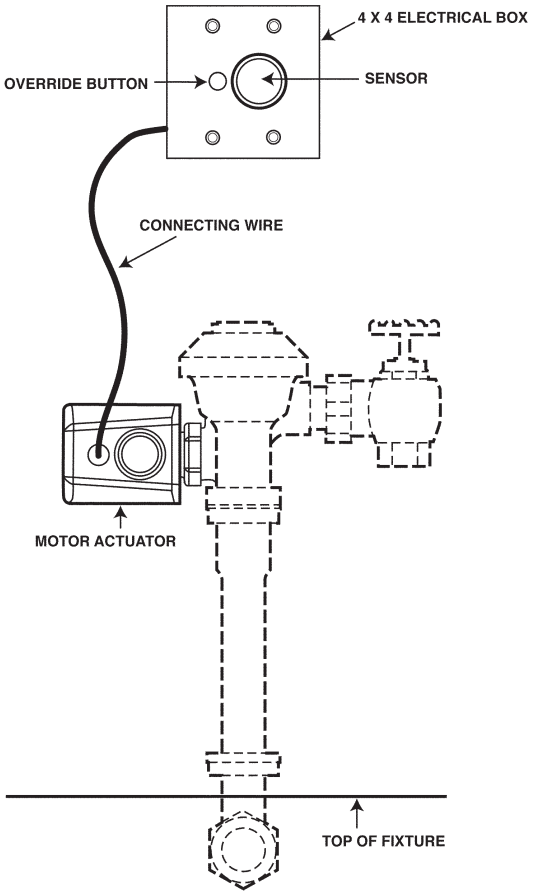

REPLACEMENT PARTS

PART #	DESCRIPTION
40291044	Override Pushbutton Assembly
40291045	Sensor for closet
40291046	Sensor for urinal
30100057	"C" batteries

ENGINEERING SPECIFICATION: ZURN ZERK-CP-CON

AQUASENSE® CONCEALED BATTERY POWERED AUTOMATIC SENSOR RETROFIT FOR CONCEALED FLUSH VALVES.The unit incorporates a 6VDC motorized actuator, a battery powered automatic sensor with a manual push-button override. Sensor features include switchable 24 hour auto flush, delay flush and diagnostic indicator lights. Unit comes complete with concealed motor actuator, wall mount sensor, chrome wall plate, 4 x 4 electrical box and 4 "C" cell batteries. Retrofits both concealed closet and urinal flush valves.

TROUBLESHOOTING GUIDE

PROBLEM	CAUSE	SOLUTION
Yellow L.E.D. flashes 3 times when there are no users.	Front of sensor is covered or sensor is set too far out, registering opposite wall or door as a user.	Remove item covering sensor or adjust sensor activation distance.
Yellow L.E.D. light flashes continuously when sensor is activated by a user.	E-Z Flush unit is in 10-minute start-up mode (when first activated).	Yellow L.E.D. light will flash only 3 times, acknowledging a user is in view after the 10-minute start-up mode.
Red L.E.D. light flashes.	Batteries need replacing.	Replace batteries.
Not enough water to fixture or too much water to fixture.	Diaphragm damaged or valve control stop improperly adjusted.	Replace diaphragm and/or adjust valve control stop.
Valve will not operate.	Sensor range set too close to E-Z Flush, batteries are dead or water supply is turned off.	Adjust sensor, replace batteries, or turn water on.
Valve will not shut off.	Dirt or debris preventing diaphragm from functioning properly.	Remove dirt or debris, consult valve manufacturer's directions.
Valve does not flush even after sensor has been adjusted.	Batteries are dead.	Replace batteries.

ZEG6003EV 1/8TH GALLON URINAL PARTS BREAKDOWN

ITEM	PART #	DESCRIPTION
1		Cover
1a		Cover o-ring
2		Cover screw
3		Electronics assembly
4		Lens assembly
5		Battery tray
6		Housing
7		Solenoid
7-8		Solenoid replacement kit
8		Screw
9	40291043	1/8th GPF Solenoid repair kit
10		1/8th GPF Valve body replacement kit
11	40291044	1/8th GPF Filter replacement kit
12		Vacuum Breaker repair kit
13		3/4" Flush connection and spud coupling
14		3/4" Control stop repair kit for 1" and 3/4"
15		Hex wrench
16		Vacuum breaker tube
17		Vacuum breaker tube nut

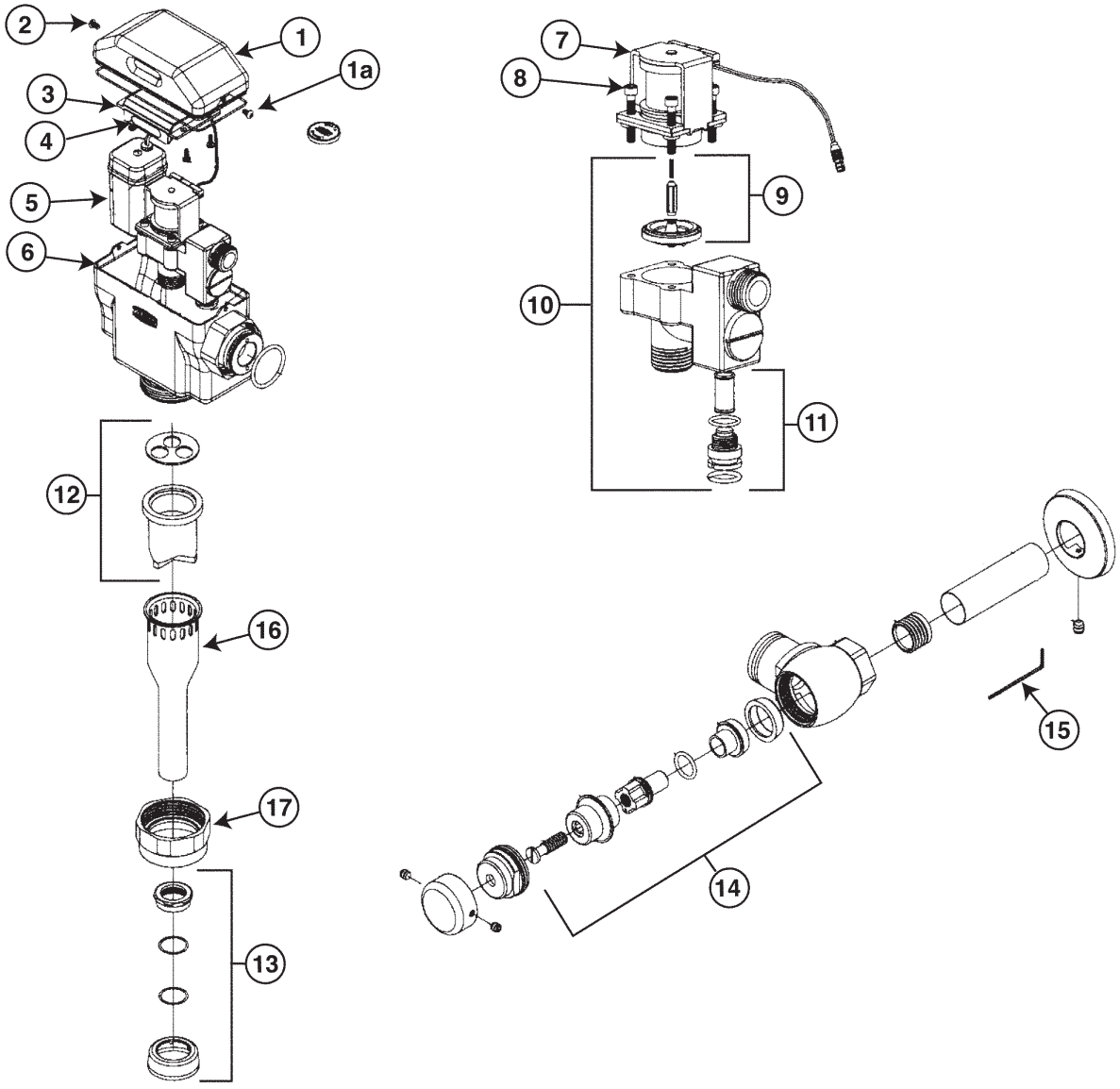

COMMON ZURN FLUSH VALVE REPAIR PARTS

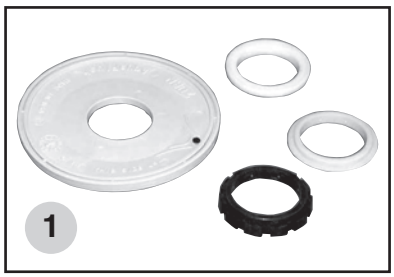

1. AQUAFLUSH REPLACEMENT DIAPHRAGM WITH FLOW RINGS
Part # 40291027

2. SD STOP VALVE REPAIR KIT – 1"
Part # 92997016

3. VACUUM BREAKER REPAIR KIT
Part # 40291040

4. PLASTIC INSIDE COVER
Part # 40221170

5. CLOSET KIT	
Part #	Description
40291036	4.5 gpf, closet
40296035	3.5 gpf, closet
40296011	1.6 gpf, closet
40291025	1.5 gpf, urinal
40291031	1.0 gpf, urinal

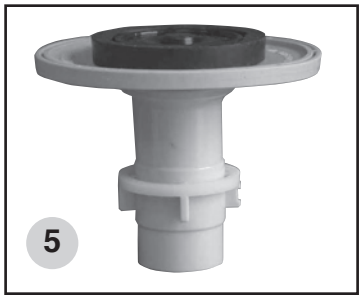

6. SIDE HANDLE REPAIR KIT (REPLACES B-50-A)
Part # 92997014

7. MASTER PARTS REPAIR KIT	
Part #	Description
92998120	4.5 gpf, closet
40291041	3.5 gpf, closet
40296011	1.6 gpf, closet
40291042	1.5 gpf, urinal
92998160	1.0 gpf, urinal

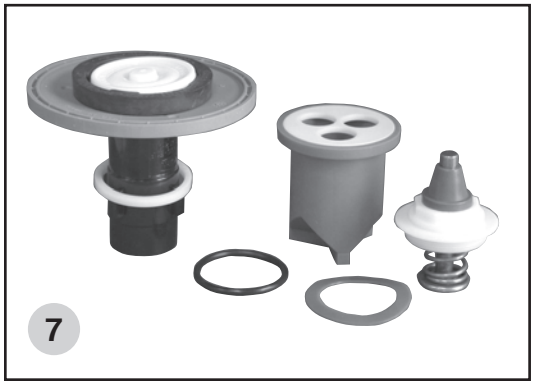
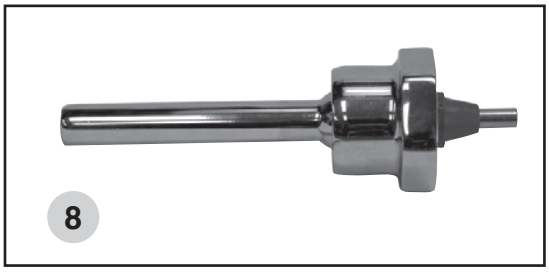
8. ADA FLUSH VALVE HANDLE
Part # 40262002